ATTACHMENT A – STUDY AREA MAP AND PROJECT LAYOUT DRAWINGS

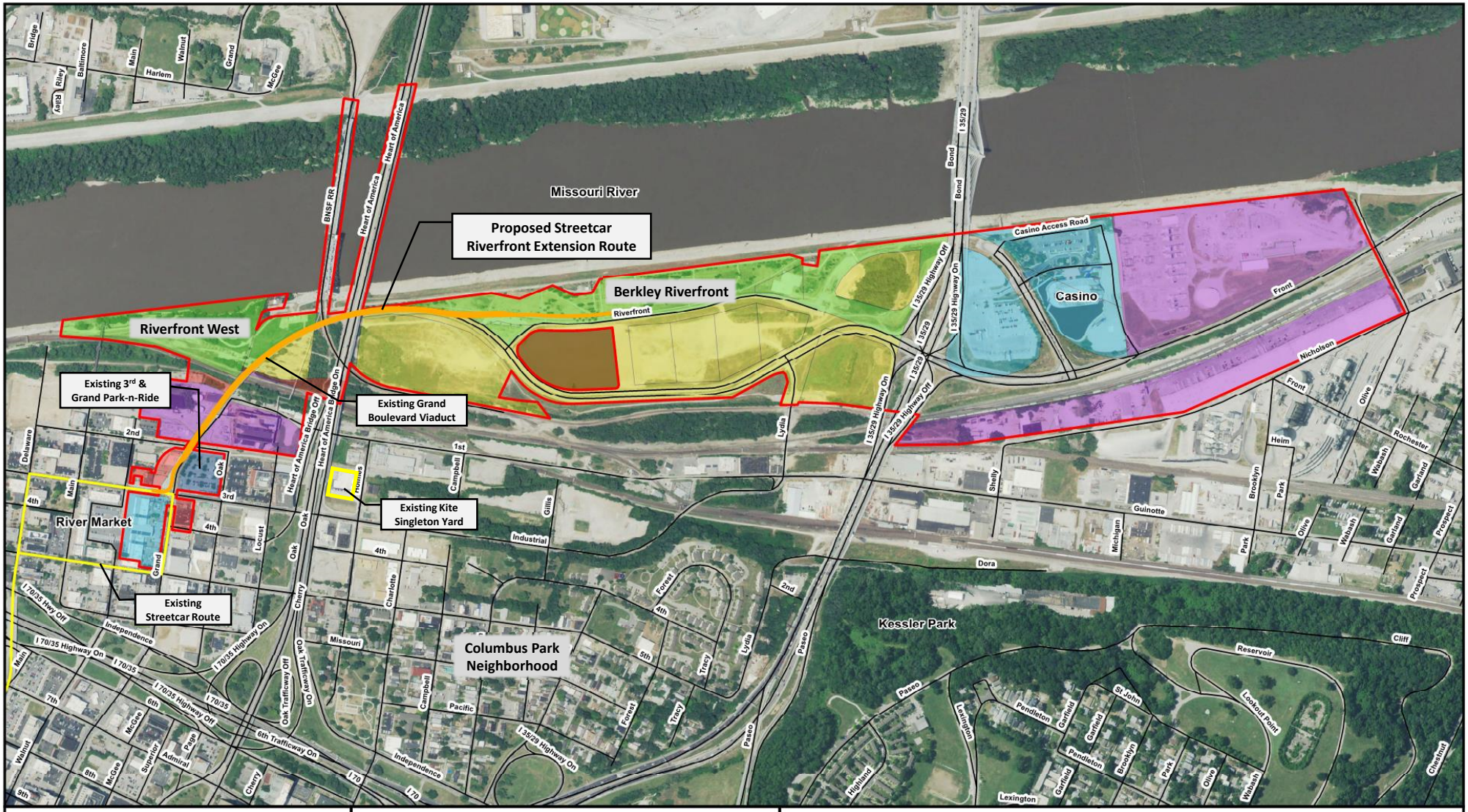

Kansas City Streetcar Riverfront Extension Project; Kansas City, Missouri
Study Area and Features

1-31-19
30% DESIGN
NOT FOR CONSTRUCTION

CITY OF KANSAS CITY, MISSOURI

KANSAS CITY STREETCAR AUTHORITY

RIVERFRONT EXTENSION STREETCAR PROJECT

VOLUME 1 - MAINLINE DESIGN

30% SUBMITTAL

PROJECT NO.:

UTILITY CONTACTS

(T50N, R33W)

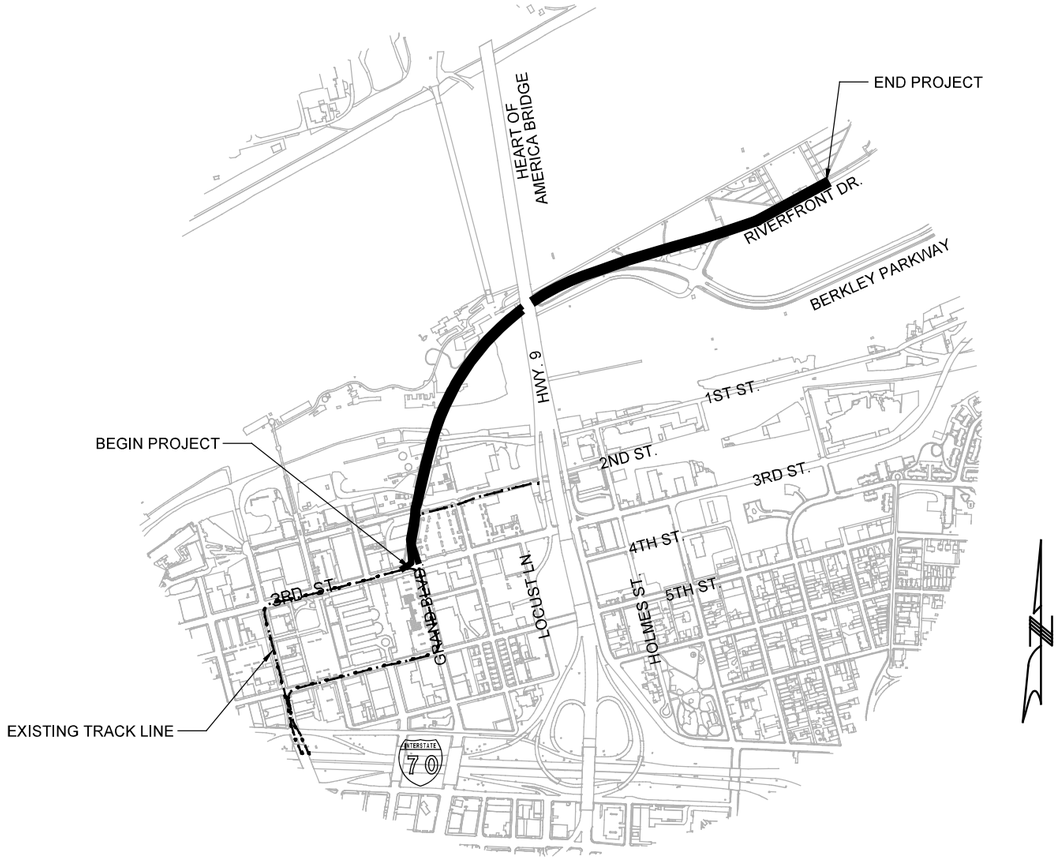

LENGTH OF PROJECT

BEGINNING OF PROJECT
END OF PROJECT
PROJECT TRACK LENGTH
EQUATIONS & EXCEPTIONS
TOTAL TRACK LENGTH

APPROVED BY _____
ASSISTANT CITY ENGINEER

_____
CITY ENGINEER

_____
DEPUTY PROJECT MANAGER

_____
DIRECTOR OF PUBLIC WORKS

_____
ENTRY NO.

PROJECT NO. _____ - _____ C.D. NO. _____ - _____

BURNS McDONNELL
9400 Ward Parkway
Kansas City, MO 64114
(816) 333-9400

SCALE FOR 22"x34":	
FILENAME: G-GP-1001.dgn	
CONTRACT NO.: XXXXXXXXX	
VOLUME: XXXXXXXXX	
DRAWING NO.: G-GP-1001	SHEET NO.: 1

1-31-19
30% DESIGN
NOT FOR CONSTRUCTION

TITLE SHEET	1		
INDEX OF SHEETS	2		
TYPICAL SECTIONS	3	TO	4
ALIGNMENT DATA	5	TO	15
TRACK PLAN & PROFILE	15	TO	32
TRACK DETAILS	33	TO	34
STATION LAYOUT	35	TO	44
SIGNAL PLANS	45	TO	50

REV	DATE	DESCRIPTION

PLOT DATE: 1/30/2019 4:45:22 PM

DESIGNED BY	BMV
CHECKED BY	DHT
DRAWN BY	AR
CHECKED BY	BMV
APPROVED BY	DHT
DATE	

RideKC STREETCAR

30% DESIGN DATE: 01-31-2019

BURNS McDONNELL
9400 Ward Parkway
Kansas City, MO 64114
(816) 333-9400

NOT FOR CONSTRUCTION

RIVERFRONT STREETCAR EXTENSION

INDEX OF SHEETS

SCALE FOR 22"x34":	NTS
FILENAME:	G-GP-1002.dgn
CONTRACT NO.:	XXXXXXXXX
CERTIFICATE OF AUTHORITY:	XXXXXXXXXX
DRAWING NO.:	G-GP-1002
SHEET NO.:	2

1-31-19
30% DESIGN
NOT FOR CONSTRUCTION

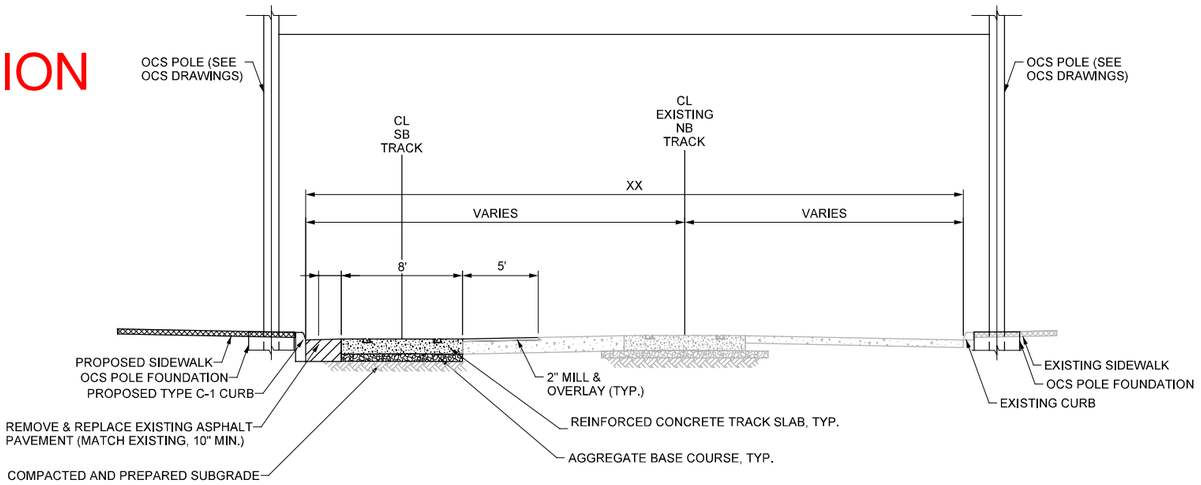

SB STA. 200+00 TO 202+75
GRAND BLVD
BETWEEN 3RD ST AND 2ND ST

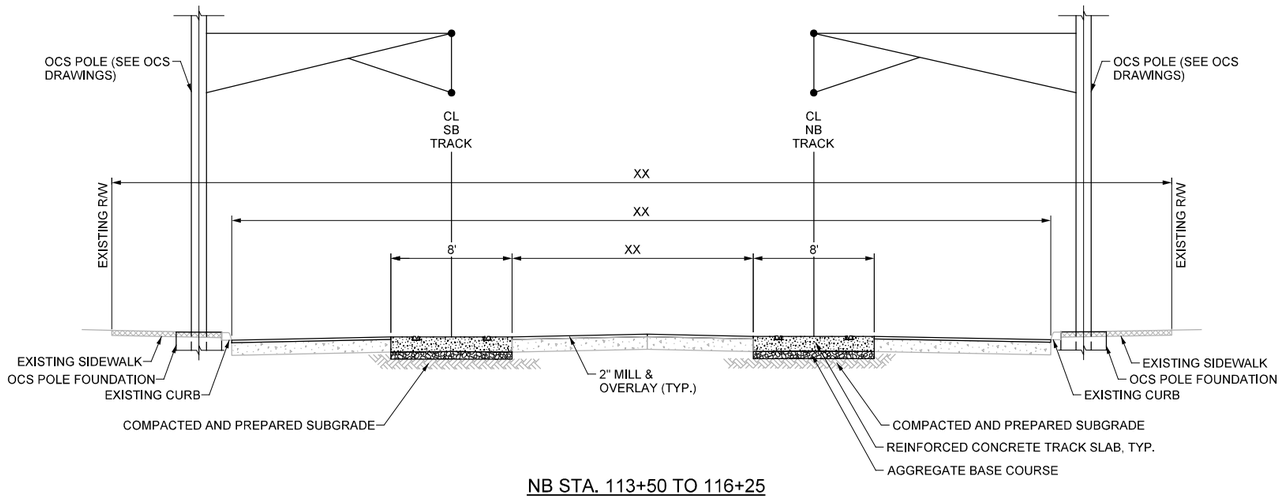

NB STA. 113+50 TO 116+25
GRAND BLVD
BETWEEN 2ND ST AND GRAND BLVD BRIDGE

GENERAL NOTES

1. FOR PAVING LIMITS AND SIDEWALK/CURB REPLACEMENT LOCATIONS, SEE CIVIL PLANS
2. TRACK SLAB CONSTRUCTION TECHNIQUE UTILIZED MAY CHANGE THE PROPOSED DESIGN OF THE STRUCTURAL LAYERS ADJACENT TO THE TRACK SLAB. MODIFICATIONS TO BE APPROVED BY THE ENGINEER PRIOR TO CONSTRUCTION.
3. FOR PROPOSED AUTO/BIKE LANE CONFIGURATIONS, SEE SIGNING AND STRIPING PLANS.
4. FOR TRACK SLAB SECTIONS, SEE SHEET NO. 37
5. PLACE CONCRETE IN LOCATIONS WHERE ASPHALT PAVEMENT BETWEEN CURB AND TRACK SLAB IS LESS THAN 12".

REV	DATE	DESCRIPTION

PLOT DATE: 1/30/2019 4:30:50 PM

DESIGNED BY	BMV
CHECKED BY	DHT
DRAWN BY	AR
CHECKED BY	BMV
APPROVED BY	DHT
DATE	

RideKC STREETCAR

30% DESIGN DATE: 01-31-2019

BURNS McDONNELL
9400 Ward Parkway
Kansas City, MO 64114
(816) 333-9400

NOT FOR CONSTRUCTION

RIVERFRONT STREETCAR EXTENSION

TYPICAL SECTIONS

SCALE FOR 22"x34":	NTS
FILENAME:	C-TS-1001.dgn
CONTRACT NO.:	XXXXXXXXX
CERTIFICATE OF AUTHORITY:	XXXXXXXXX
DRAWING NO.:	C-TS-1001
SHEET NO.:	3

1-31-19
30% DESIGN
NOT FOR CONSTRUCTION

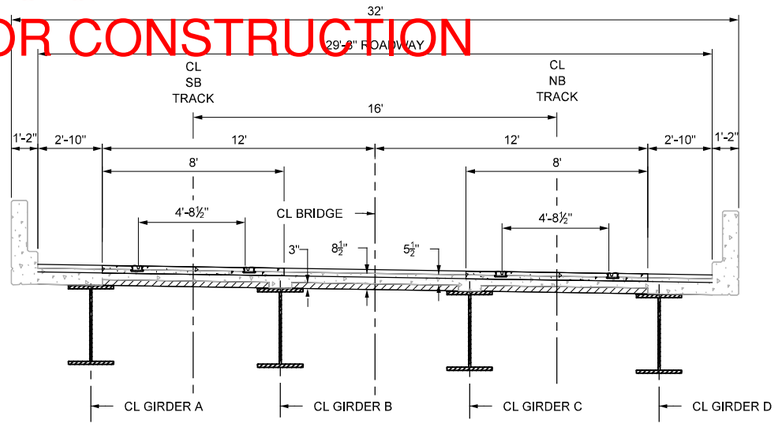

NB STA. 118+33.88 TO 131+39.35
GRAND BLVD BRIDGE SECTION

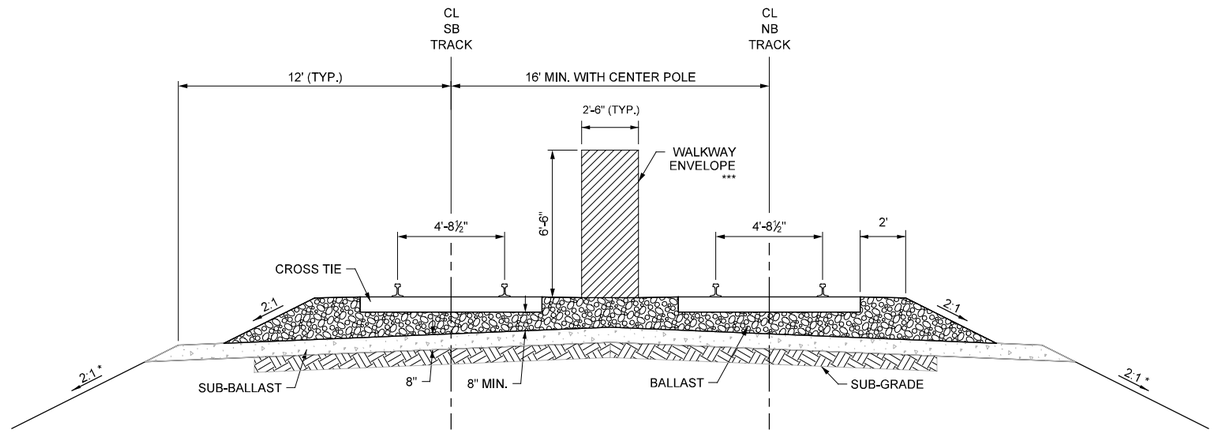

NB STA. XX+XX TO XX.XX
DOUBLE TRACK

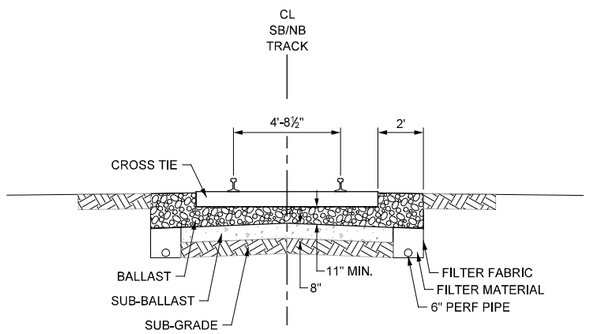

NB STA. XX+XX TO XX+XX
SB STA. XX+XX TO XX+XX
BALLAST TRACK
CUT SECTION

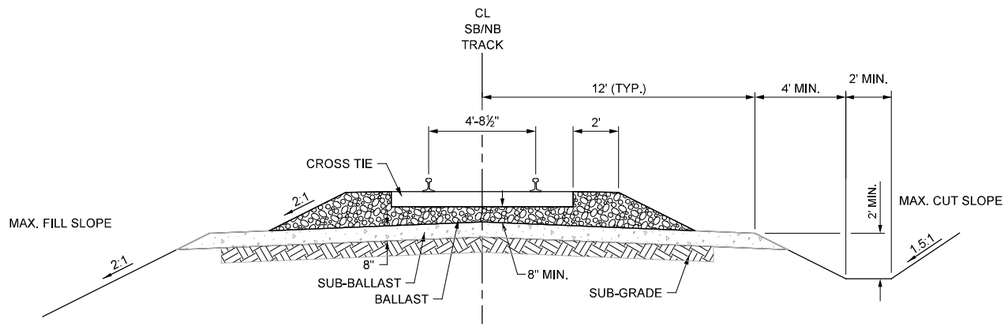

NB STA. XX+XX TO XX+XX
SB STA. XX+XX TO XX+XX
BALLAST TRACK
FILL SECTION

REV	DATE	DESCRIPTION

PLOT DATE: 1/30/2019 4:30:54 PM

DESIGNED BY	BMV
CHECKED BY	DHT
DRAWN BY	AR
CHECKED BY	BMV
APPROVED BY	DHT
DATE	

RideKC STREETCAR

30% DESIGN DATE: 01-31-2019

BURNS McDONNELL
9400 Ward Parkway
Kansas City, MO 64114
(816) 333-9400

NOT FOR CONSTRUCTION

RIVERFRONT STREETCAR EXTENSION

TYPICAL SECTIONS

SCALE FOR 22"x34":	NTS
FILENAME:	C-TS-1002.dgn
CONTRACT NO.:	XXXXXXXXX
CERTIFICATE OF AUTHORITY:	XXXXXXXXXX
DRAWING NO.:	C-TS-1002
SHEET NO.:	4

1-31-19
30% DESIGN
NOT FOR CONSTRUCTION

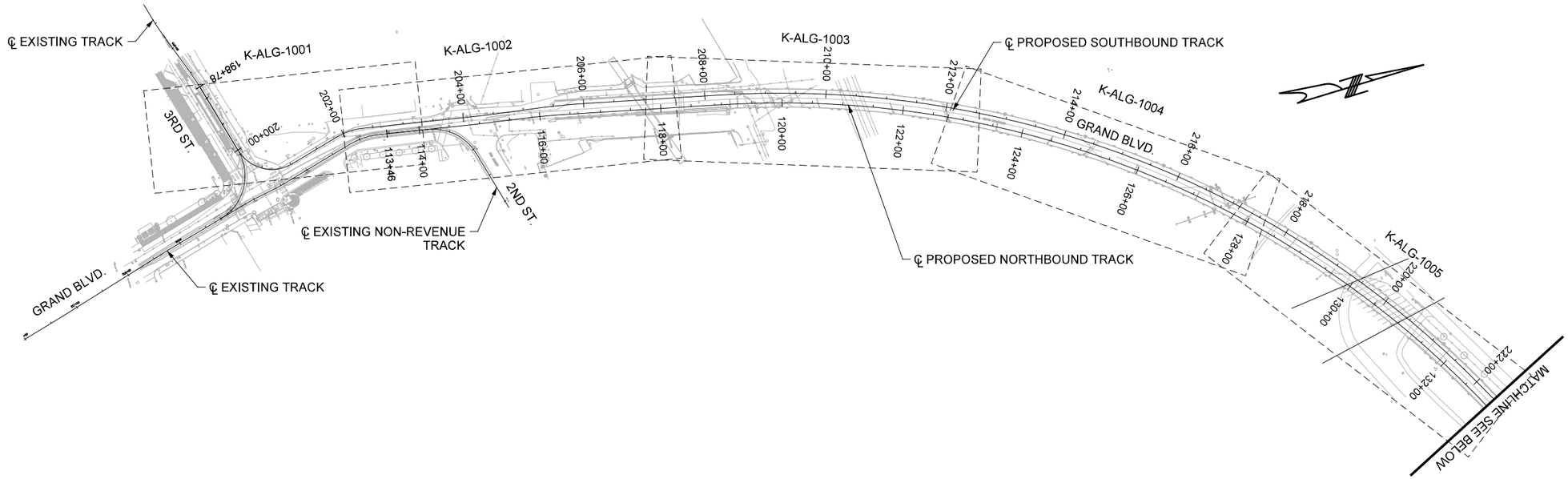

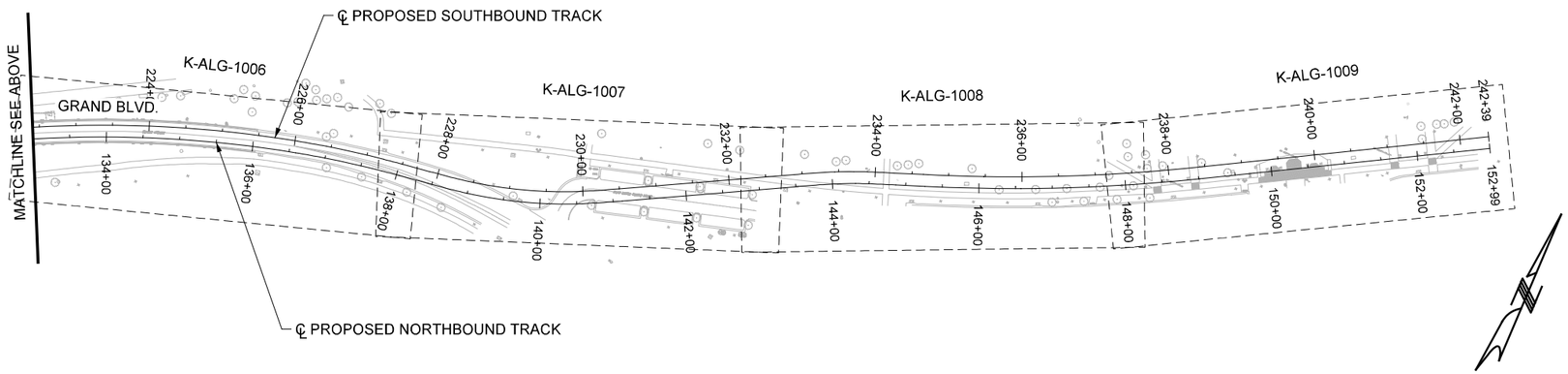

GENERAL NOTES

1. SHEET NUMBERS REFER TO ALIGNMENT SHEET NUMBERING.

SCALE
0 100 200 300

REV	DATE	DESCRIPTION

PLOT DATE: 1/30/2019 4:31:03 PM

DESIGNED BY	BMV
CHECKED BY	DHT
DRAWN BY	AR
CHECKED BY	BMV
APPROVED BY	DHT
DATE	

RideKC STREETCAR

30% DESIGN DATE: 01-31-2019

BURNS McDONNELL
9400 Ward Parkway
Kansas City, MO 64114
(816) 333-9400

NOT FOR CONSTRUCTION

RIVERFRONT STREETCAR EXTENSION

TRACK KEY MAP

SCALE FOR 22"x34":	1"=100'
FILENAME:	K-001.dgn
CONTRACT NO.:	XXXXXXXXX
CERTIFICATE OF AUTHORITY:	XXXXXXXXXX
DRAWING NO.:	K-001
SHEET NO.:	5

1-31-19
30% DESIGN
NOT FOR CONSTRUCTION

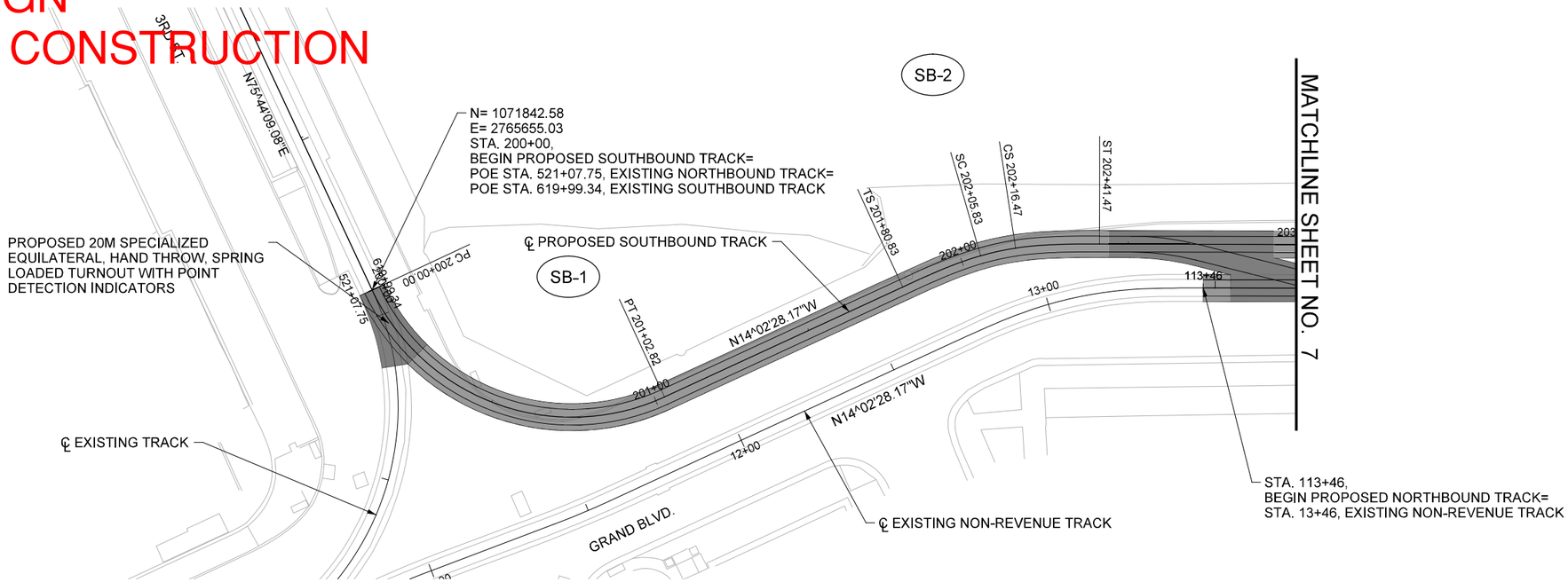

CURVE	POINT	BEARING	DISTANCE	STATION	NORTHING	EASTING	△	RADIUS	L	D	T	K	P	Ea	Eu	V
SB-1	PC															
	PI							65.62	102.82		65.37			0	1.51	5
	PT															

CURVE	POINT	BEARING	DISTANCE	STATION	NORTHING	EASTING	△	RADIUS	L	D	T	K	P	Ea	Eu	V
SB-2	TS								25			12.5	0.32			
	SPI															
	SC															
	PI							82.02	10.64					0	1.21	5
	CS								25			12.5	0.32			
	SPI															
	ST															

GENERAL NOTES

1. PROFILE SHOWN IS AT A 30% LEVEL AND INTENDED TO ILLUSTRATE THE EXISTING STREET GRADES AND TO CONFIRM PLATFORM LOCATIONS.

2. ALL ELEVATIONS AND DIMENSIONS GIVEN ARE IN FEET UNLESS OTHERWISE NOTED.

3. ALL CURVES ARE BASED ON ARC DEFINITION.

4. PROFILES DESIGNED TO FINAL TOP OF RAIL ELEVATION.

LEGEND

EMBEDDED TRACK

BALLAST TRACK

TRACK SWITCH

REV	DATE	DESCRIPTION

PLOT DATE: 1/30/2019 4:31:12 PM

DESIGNED BY BMV
CHECKED BY DHT
DRAWN BY AR
CHECKED BY BMV
APPROVED BY DHT
DATE

RideKC STREETCAR

30% DESIGN DATE: 01-31-2019

BURNS McDONNELL
9400 Ward Parkway
Kansas City, MO 64114
(816) 333-9400

NOT FOR CONSTRUCTION

RIVERFRONT STREETCAR EXTENSION

SOUTHBOUND TRACK
ALIGNMENT
GRAND BOULEVARD
SB STA. 200+00 TO 203+00

SCALE FOR 22"x34": 1"=20'
FILENAME: K-ALG-1001.dgn
CONTRACT NO.: XXXXXXXXX
CERTIFICATE OF AUTHORITY: XXXXXXXXXX
DRAWING NO.: K-ALG-1001
SHEET NO.: 6

1-31-19
30% DESIGN
NOT FOR CONSTRUCTION

CURVE	POINT	BEARING	DISTANCE	STATION	NORTHING	EASTING	△	RADIUS	L	D	T	K	P	Ea	Eu	V
SB-3	TS								25							
	SPI															
	SC															
	PI							1600	23.05					0	2.23	30
	CS								25							
	SPI															
	ST															

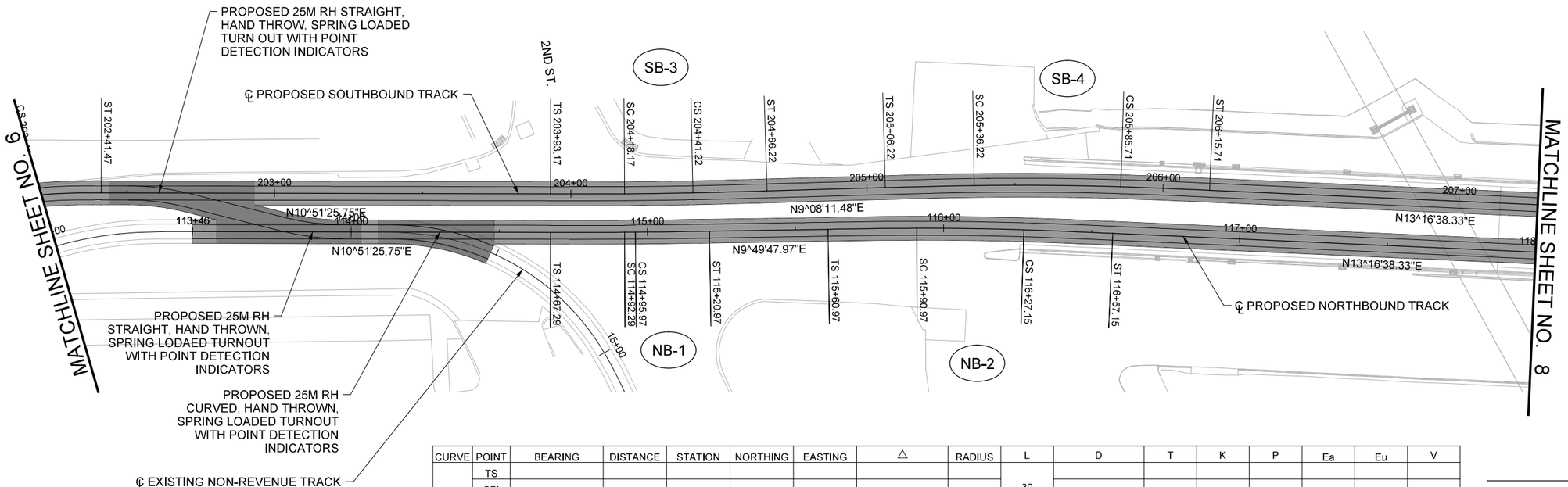

SCALE
0 20 40 60

CURVE	POINT	BEARING	DISTANCE	STATION	NORTHING	EASTING	△	RADIUS	L	D	T	K	P	Ea	Eu	V
SB-4	TS								30							
	SPI															
	SC															
	PI							1100	49.5					0	3.24	30
	CS								30							
	SPI															
	ST															

CURVE	POINT	BEARING	DISTANCE	STATION	NORTHING	EASTING	△	RADIUS	L	D	T	K	P	Ea	Eu	V
NB-1	TS								25							
	SPI															
	SC															
	PI							1600	3.68					0	2.23	30
	CS								25							
	SPI															
	ST															

CURVE	POINT	BEARING	DISTANCE	STATION	NORTHING	EASTING	△	RADIUS	L	D	T	K	P	Ea	Eu	V
NB-2	TS								30							
	SPI															
	SC															
	PI							1100	36.18					0	3.24	30
	CS								30							
	SPI															
	ST															

GENERAL NOTES

1. PROFILE SHOWN IS AT A 30% LEVEL AND INTENDED TO ILLUSTRATE THE EXISTING STREET GRADES AND TO CONFIRM PLATFORM LOCATIONS.

2. ALL ELEVATIONS AND DIMENSIONS GIVEN ARE IN FEET UNLESS OTHERWISE NOTED.

3. ALL CURVES ARE BASED ON ARC DEFINITION.

4. PROFILES DESIGNED TO FINAL TOP OF RAIL ELEVATION.

LEGEND

- EMBEDDED TRACK
- BALLAST TRACK
- TRACK SWITCH

REV	DATE	DESCRIPTION

PLOT DATE: 1/30/2019 4:31:16 PM

DESIGNED BY BMV
CHECKED BY DHT
DRAWN BY AR
CHECKED BY BMV
APPROVED BY DHT
DATE

RideKC STREETCAR

30% DESIGN DATE: 01-31-2019

BURNS McDONNELL
9400 Ward Parkway
Kansas City, MO 64114
(816) 333-9400

NOT FOR CONSTRUCTION

RIVERFRONT STREETCAR EXTENSION

NORTHBOUND AND SOUTHBOUND TRACK
ALIGNMENT
GRAND BOULEVARD
NB STA. 113+00 TO 118+00

SCALE FOR 22"x34": 1"=20'
FILENAME: K-ALG-1002.dgn
CONTRACT NO.: XXXXXXXXX
CERTIFICATE OF AUTHORITY: XXXXXXXXX
DRAWING NO.: K-ALG-1002
SHEET NO.: 7

1-31-19
30% DESIGN
NOT FOR CONSTRUCTION

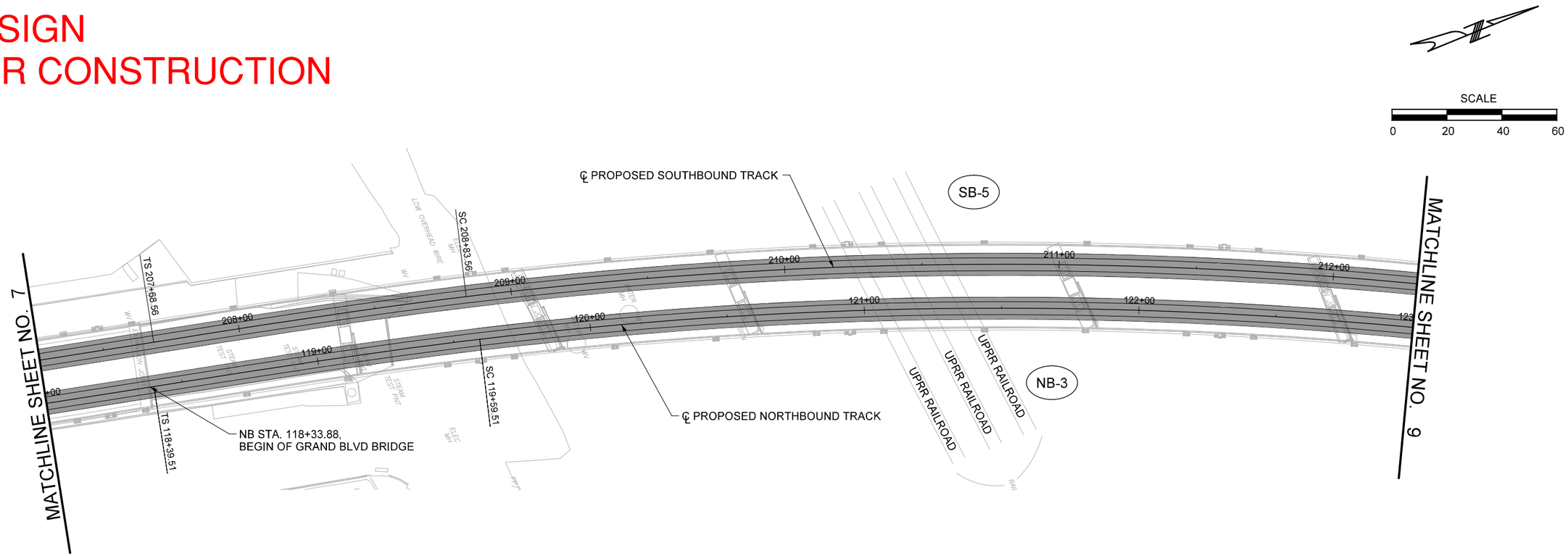

CURVE	POINT	BEARING	DISTANCE	STATION	NORTHING	EASTING	△	RADIUS	L	D	T	K	P	Ea	Eu	V
SB-5	TS								115							
	SPI															
	SC															
	PI							1616	1720					0	3	35
	CS															
	SPI															
	ST															

CURVE	POINT	BEARING	DISTANCE	STATION	NORTHING	EASTING	△	RADIUS	L	D	T	K	P	Ea	Eu	V
NB-3	TS								120							
	SPI															
	SC															
	PI							1600	1700					0	3.03	35
	CS															
	SPI															
	ST															

GENERAL NOTES

1. PROFILE SHOWN IS AT A 30% LEVEL AND INTENDED TO ILLUSTRATE THE EXISTING STREET GRADES AND TO CONFIRM PLATFORM LOCATIONS.

2. ALL ELEVATIONS AND DIMENSIONS GIVEN ARE IN FEET UNLESS OTHERWISE NOTED.

3. ALL CURVES ARE BASED ON ARC DEFINITION.

4. PROFILES DESIGNED TO FINAL TOP OF RAIL ELEVATION.

LEGEND

EMBEDDED TRACK

BALLAST TRACK

TRACK SWITCH

REV	DATE	DESCRIPTION

PLOT DATE: 1/30/2019 4:31:22 PM

DESIGNED BY	BMV
CHECKED BY	DHT
DRAWN BY	AR
CHECKED BY	BMV
APPROVED BY	DHT
DATE	

RideKC STREETCAR

30% DESIGN DATE: 01-31-2019

BURNS McDONNELL
9400 Ward Parkway
Kansas City, MO 64114
(816) 333-9400

NOT FOR CONSTRUCTION

RIVERFRONT STREETCAR EXTENSION

NORTHBOUND AND SOUTHBOUND TRACK
ALIGNMENT
GRAND BOULEVARD
NB STA. 118+00 TO 123+00

SCALE FOR 22"x34":	1"=20'
FILENAME:	K-ALG-1003.dgn
CONTRACT NO.:	XXXXXXXXX
CERTIFICATE OF AUTHORITY:	XXXXXXXXXX
DRAWING NO.:	K-ALG-1003
SHEET NO.:	8

1-31-19
30% DESIGN
NOT FOR CONSTRUCTION

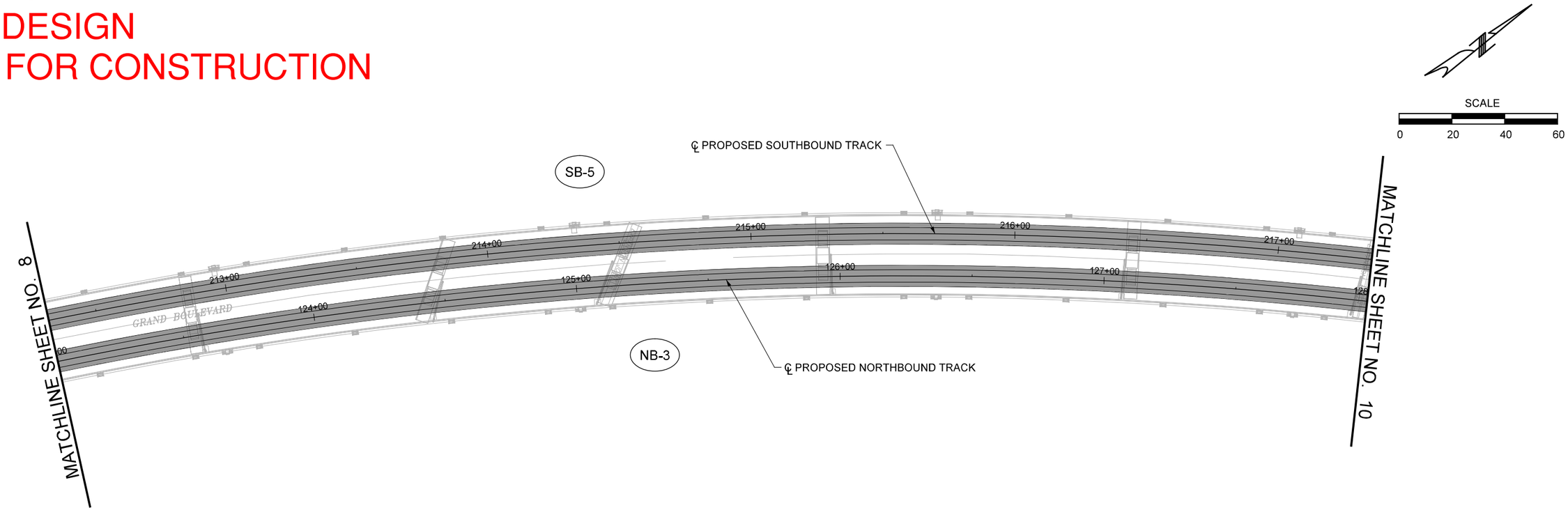

GENERAL NOTES

1. PROFILE SHOWN IS AT A 30% LEVEL AND INTENDED TO ILLUSTRATE THE EXISTING STREET GRADES AND TO CONFIRM PLATFORM LOCATIONS.

2. ALL ELEVATIONS AND DIMENSIONS GIVEN ARE IN FEET UNLESS OTHERWISE NOTED.

3. ALL CURVES ARE BASED ON ARC DEFINITION.

4. PROFILES DESIGNED TO FINAL TOP OF RAIL ELEVATION.

5. SEE SHEET NO. 8 FOR CURVE INFORMATION.

LEGEND

- EMBEDDED TRACK
- BALLAST TRACK
- TRACK SWITCH

REV	DATE	DESCRIPTION

PLOT DATE: 1/30/2019 4:31:26 PM

DESIGNED BY	BMV
CHECKED BY	DHT
DRAWN BY	AR
CHECKED BY	BMV
APPROVED BY	DHT
DATE	

RideKC STREETCAR

30% DESIGN DATE: 01-31-2019

BURNS McDONNELL
9400 Ward Parkway
Kansas City, MO 64114
(816) 333-9400

NOT FOR CONSTRUCTION

RIVERFRONT STREETCAR EXTENSION

NORTHBOUND AND SOUTHBOUND TRACK
ALIGNMENT
GRAND BOULEVARD
NB STA. 123+00 TO 128+00

SCALE FOR 22"x34":	1"=20'
FILENAME:	K-ALG-1004.dgn
CONTRACT NO.:	XXXXXXXXX
CERTIFICATE OF AUTHORITY:	XXXXXXXXXX
DRAWING NO.:	K-ALG-1004
SHEET NO.:	9

1-31-19
30% DESIGN
NOT FOR CONSTRUCTION

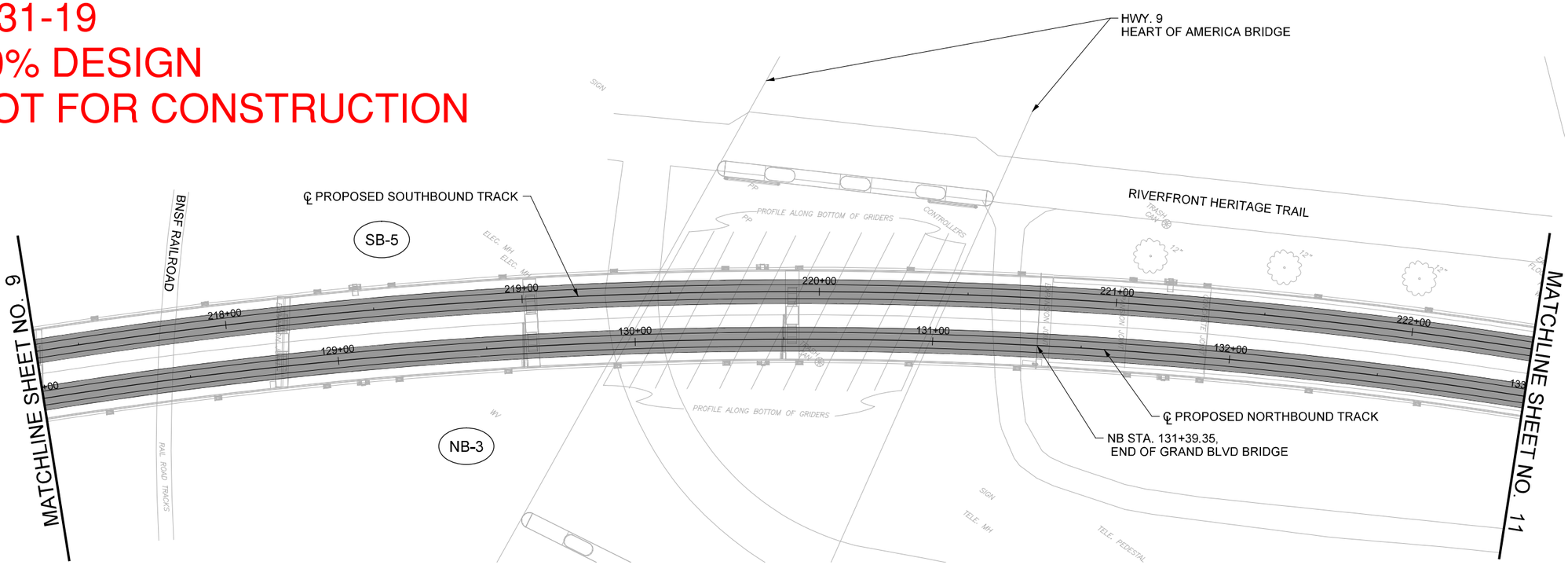

SCALE
0 20 40 60

GENERAL NOTES

1. PROFILE SHOWN IS AT A 30% LEVEL AND INTENDED TO ILLUSTRATE THE EXISTING STREET GRADES AND TO CONFIRM PLATFORM LOCATIONS.

2. ALL ELEVATIONS AND DIMENSIONS GIVEN ARE IN FEET UNLESS OTHERWISE NOTED.

3. ALL CURVES ARE BASED ON ARC DEFINITION.

4. PROFILES DESIGNED TO FINAL TOP OF RAIL ELEVATION.

5. SEE SHEET NO. 8 FOR CURVE INFORMATION.

LEGEND

EMBEDDED TRACK

BALLAST TRACK

TRACK SWITCH

REV	DATE	DESCRIPTION

PLOT DATE: 1/30/2019 4:31:30 PM

DESIGNED BY	BMV
CHECKED BY	DHT
DRAWN BY	AR
CHECKED BY	BMV
APPROVED BY	DHT
DATE	

RideKC STREETCAR

30% DESIGN DATE: 01-31-2019

BURNS McDONNELL
9400 Ward Parkway
Kansas City, MO 64114
(816) 333-9400

NOT FOR CONSTRUCTION

RIVERFRONT STREETCAR EXTENSION

NORTHBOUND AND SOUTHBOUND TRACK
ALIGNMENT
GRAND BOULEVARD
NB STA. 128+00 TO 133+00

SCALE FOR 22"x34":	1"=20'
FILENAME:	K-ALG-1005.dgn
CONTRACT NO.:	XXXXXXXXX
CERTIFICATE OF AUTHORITY:	XXXXXXXXXX
DRAWING NO.:	K-ALG-1005
SHEET NO.:	10

1-31-19
30% DESIGN
NOT FOR CONSTRUCTION

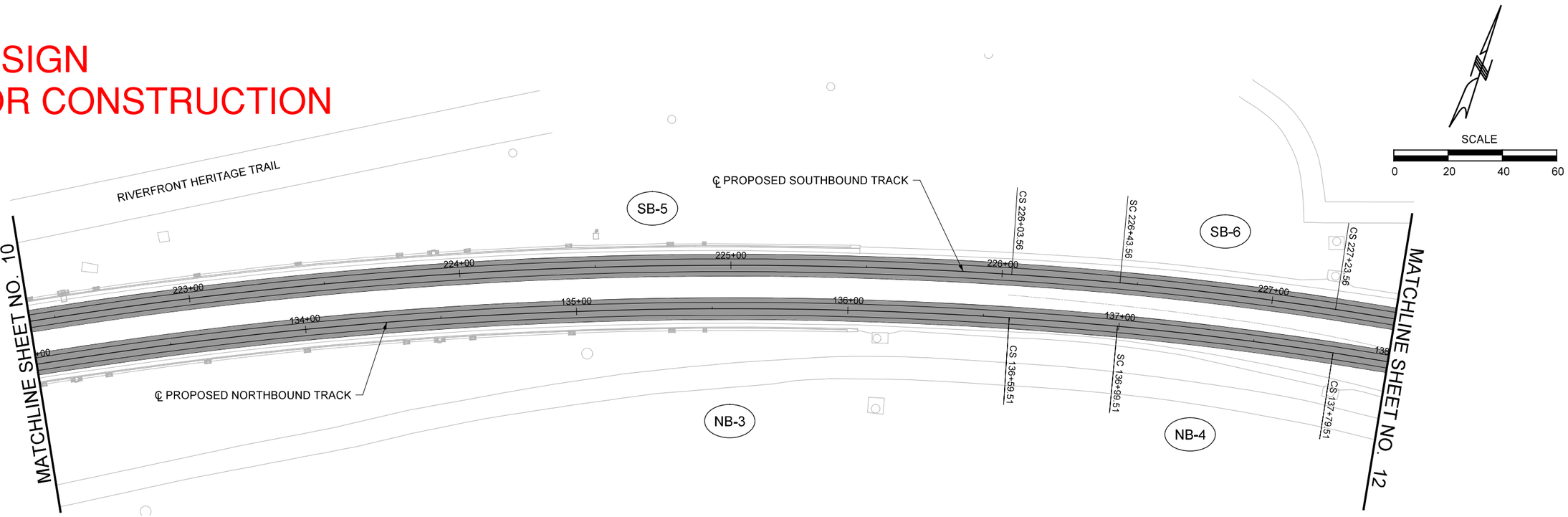

CURVE	POINT	BEARING	DISTANCE	STATION	NORTHING	EASTING	△	RADIUS	L	D	T	K	P	Ea	Eu	V
	CS								40							
	SPI															
	SC															
SB-6	PC															
	PI							1316	80					0	2.71	30
	PT															
	CS								25							
	SPI															
	SC															

CURVE	POINT	BEARING	DISTANCE	STATION	NORTHING	EASTING	△	RADIUS	L	D	T	K	P	Ea	Eu	V
	CS								40							
	SPI															
	SC															
NB-4	PC															
	PI							1300	80					0	2.74	30
	PT															
	CS								25							
	SPI															
	SC															

GENERAL NOTES

1. PROFILE SHOWN IS AT A 30% LEVEL AND INTENDED TO ILLUSTRATE THE EXISTING STREET GRADES AND TO CONFIRM PLATFORM LOCATIONS.

2. ALL ELEVATIONS AND DIMENSIONS GIVEN ARE IN FEET UNLESS OTHERWISE NOTED.

3. ALL CURVES ARE BASED ON ARC DEFINITION.

4. PROFILES DESIGNED TO FINAL TOP OF RAIL ELEVATION.

5. SEE SHEET NO. 8 FOR CURVE INFORMATION FOR CURVES SB-5 AND NB-3.

LEGEND

EMBEDDED TRACK

BALLAST TRACK

TRACK SWITCH

REV	DATE	DESCRIPTION

PLOT DATE: 1/30/2019 4:31:34 PM

DESIGNED BY	BMV
CHECKED BY	DHT
DRAWN BY	AR
CHECKED BY	BMV
APPROVED BY	DHT
DATE	

RideKC STREETCAR

30% DESIGN DATE: 01-31-2019

BURNS McDONNELL
9400 Ward Parkway
Kansas City, MO 64114
(816) 333-9400

NOT FOR CONSTRUCTION

RIVERFRONT STREETCAR EXTENSION

NORTHBOUND AND SOUTHBOUND TRACK
ALIGNMENT
GRAND BOULEVARD
NB STA. 133+00 TO 138+00

SCALE FOR 22"x34":	1"=20'
FILENAME:	K-ALG-1006.dgn
CONTRACT NO.:	XXXXXXXXX
CERTIFICATE OF AUTHORITY:	XXXXXXXXXX
DRAWING NO.:	K-ALG-1006
SHEET NO.:	11

1-31-19
30% DESIGN
NOT FOR CONSTRUCTION

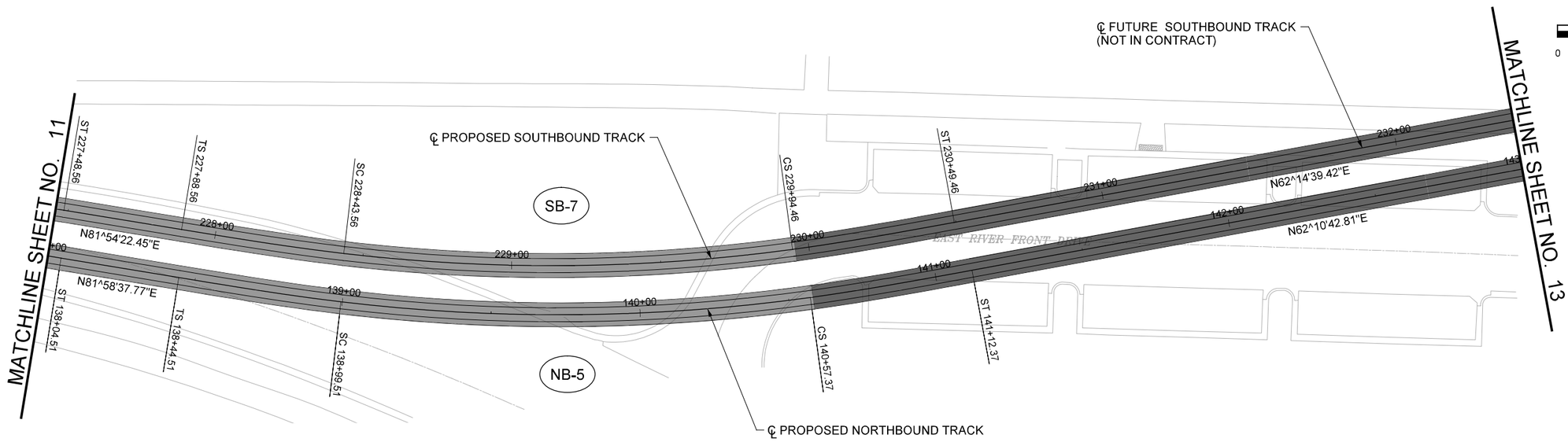

SCALE
0 20 40 60

CURVE	POINT	BEARING	DISTANCE	STATION	NORTHING	EASTING	△	RADIUS	L	D	T	K	P	Ea	Eu	V
SB-7	TS								40							
	SPI															
	SC															
	PI							600	80					0	5.94	30
	CS								25							
	SPI															
	ST															

CURVE	POINT	BEARING	DISTANCE	STATION	NORTHING	EASTING	△	RADIUS	L	D	T	K	P	Ea	Eu	V
NB-5	TS								55							
	SPI															
	SC															
	PI							616	157.86					0	5.79	30
	CS								55							
	SPI															
	ST															

GENERAL NOTES

1. PROFILE SHOWN IS AT A 30% LEVEL AND INTENDED TO ILLUSTRATE THE EXISTING STREET GRADES AND TO CONFIRM PLATFORM LOCATIONS.

2. ALL ELEVATIONS AND DIMENSIONS GIVEN ARE IN FEET UNLESS OTHERWISE NOTED.

3. ALL CURVES ARE BASED ON ARC DEFINITION.

4. PROFILES DESIGNED TO FINAL TOP OF RAIL ELEVATION.

LEGEND

EMBEDDED TRACK

BALLAST TRACK

TRACK SWITCH

REV	DATE	DESCRIPTION

PLOT DATE: 1/30/2019 4:31:38 PM

DESIGNED BY BMV
CHECKED BY DHT
DRAWN BY AR
CHECKED BY BMV
APPROVED BY DHT
DATE

RideKC STREETCAR

30% DESIGN DATE: 01-31-2019

BURNS McDONNELL
9400 Ward Parkway
Kansas City, MO 64114
(816) 333-9400

NOT FOR CONSTRUCTION

RIVERFRONT STREETCAR EXTENSION

NORTHBOUND AND SOUTHBOUND TRACK
ALIGNMENT
GRAND BOULEVARD
NB STA. 138+00 TO 143+00

SCALE FOR 22"x34": 1"=20'	
FILENAME: K-ALG-1007.dgn	
CONTRACT NO.: XXXXXXXXX	
CERTIFICATE OF AUTHORITY: XXXXXXXXXX	
DRAWING NO.: K-ALG-1007	SHEET NO.: 12

1-31-19
30% DESIGN
NOT FOR CONSTRUCTION

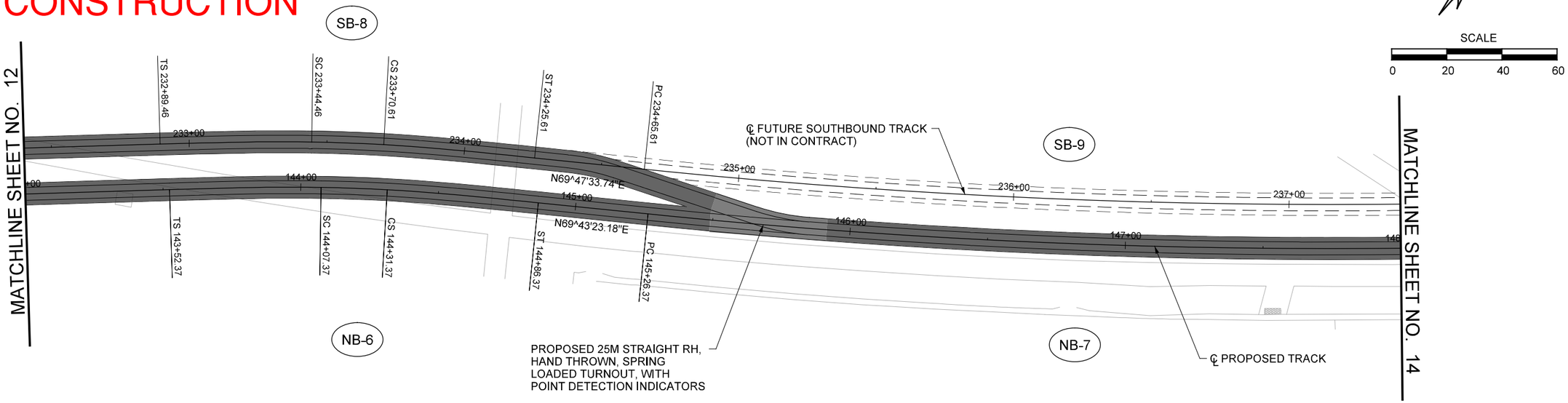

CURVE	POINT	BEARING	DISTANCE	STATION	NORTHING	EASTING	△	RADIUS	L	D	T	K	P	Ea	Eu	V
SB-8	TS								55							
	SPI															
	SC															
	PI							616	150.9					0	5.79	30
	CS								55							
	SPI															
	ST															

CURVE	POINT	BEARING	DISTANCE	STATION	NORTHING	EASTING	△	RADIUS	L	D	T	K	P	Ea	Eu	V
NB-6	TS								55							
	SPI															
	SC															
	PI							600	24.01					0	5.94	30
	CS								55							
	SPI															
	ST															

GENERAL NOTES

1. PROFILE SHOWN IS AT A 30% LEVEL AND INTENDED TO ILLUSTRATE THE EXISTING STREET GRADES AND TO CONFIRM PLATFORM LOCATIONS.

2. ALL ELEVATIONS AND DIMENSIONS GIVEN ARE IN FEET UNLESS OTHERWISE NOTED.

3. ALL CURVES ARE BASED ON ARC DEFINITION.

4. PROFILES DESIGNED TO FINAL TOP OF RAIL ELEVATION.

LEGEND

EMBEDDED TRACK

BALLAST TRACK

TRACK SWITCH

REV	DATE	DESCRIPTION

PLOT DATE: 1/30/2019 4:31:45 PM

DESIGNED BY BMV
CHECKED BY DHT
DRAWN BY AR
CHECKED BY BMV
APPROVED BY DHT
DATE

RideKC STREETCAR

30% DESIGN DATE: 01-31-2019

BURNS McDONNELL
9400 Ward Parkway
Kansas City, MO 64114
(816) 333-9400

NOT FOR CONSTRUCTION

RIVERFRONT STREETCAR EXTENSION

NORTHBOUND AND SOUTHBOUND TRACK
ALIGNMENT
GRAND BOULEVARD
NB STA. 143+00 TO 148+00

SCALE FOR 22"x34": 1"=20'
FILENAME: K-ALG-1008.dgn
CONTRACT NO.: XXXXXXXXX
CERTIFICATE OF AUTHORITY: XXXXXXXXXX
DRAWING NO.: K-ALG-1008
SHEET NO.: 13

1-31-19
30% DESIGN
NOT FOR CONSTRUCTION

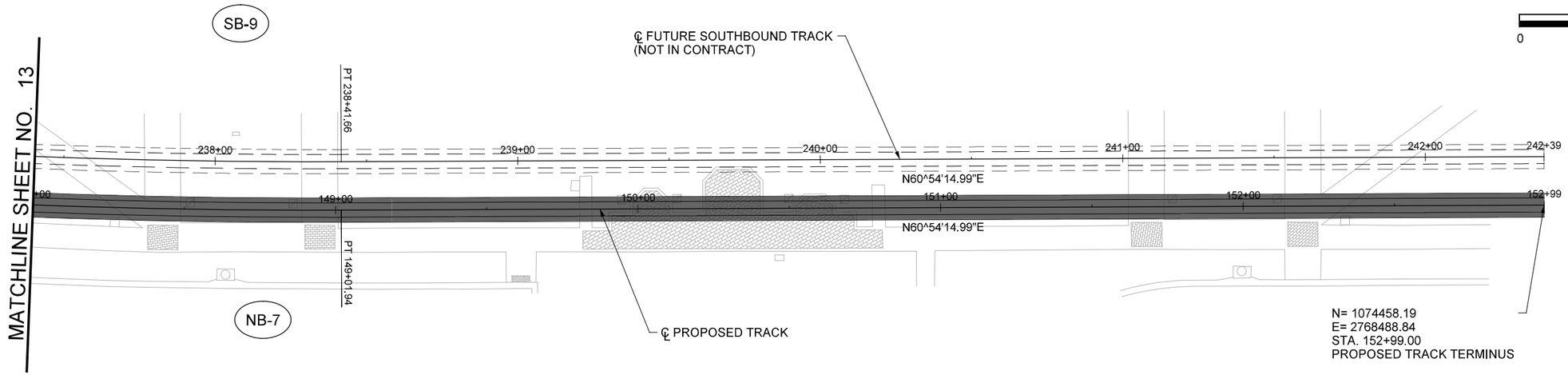

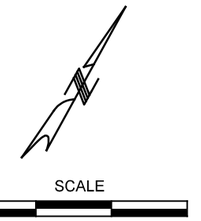

CURVE	POINT	BEARING	DISTANCE	STATION	NORTHING	EASTING	△	RADIUS	L	D	T	K	P	Ea	Eu	V
SB-9	PC															
	PI							2424	26.15					0	1.47	30
	PT															

CURVE	POINT	BEARING	DISTANCE	STATION	NORTHING	EASTING	△	RADIUS	L	D	T	K	P	Ea	Eu	V
NB-7	PC															
	PI							2440	375.56					0	1.46	30
	PT															

GENERAL NOTES

1. PROFILE SHOWN IS AT A 30% LEVEL AND INTENDED TO ILLUSTRATE THE EXISTING STREET GRADES AND TO CONFIRM PLATFORM LOCATIONS.

2. ALL ELEVATIONS AND DIMENSIONS GIVEN ARE IN FEET UNLESS OTHERWISE NOTED.

3. ALL CURVES ARE BASED ON ARC DEFINITION.

4. PROFILES DESIGNED TO FINAL TOP OF RAIL ELEVATION.

LEGEND

EMBEDDED TRACK

BALLAST TRACK

TRACK SWITCH

REV	DATE	DESCRIPTION

PLOT DATE: 1/30/2019 4:31:51 PM

DESIGNED BY BMV
CHECKED BY DHT
DRAWN BY AR
CHECKED BY BMV
APPROVED BY DHT
DATE

RideKC STREETCAR

30% DESIGN DATE: 01-31-2019

BURNS McDONNELL
9400 Ward Parkway
Kansas City, MO 64114
(816) 333-9400

NOT FOR CONSTRUCTION

RIVERFRONT STREETCAR EXTENSION

NORTHBOUND AND SOUTHBOUND TRACK
ALIGNMENT
GRAND BOULEVARD
NB STA. 148+00 TO 153+00

SCALE FOR 22"x34":	1"=20'
FILENAME:	K-ALG-1009.dgn
CONTRACT NO.:	XXXXXXXXX
CERTIFICATE OF AUTHORITY:	XXXXXXXXXX
DRAWING NO.:	K-ALG-1009
SHEET NO.:	14

1-31-19
30% DESIGN
NOT FOR CONSTRUCTION

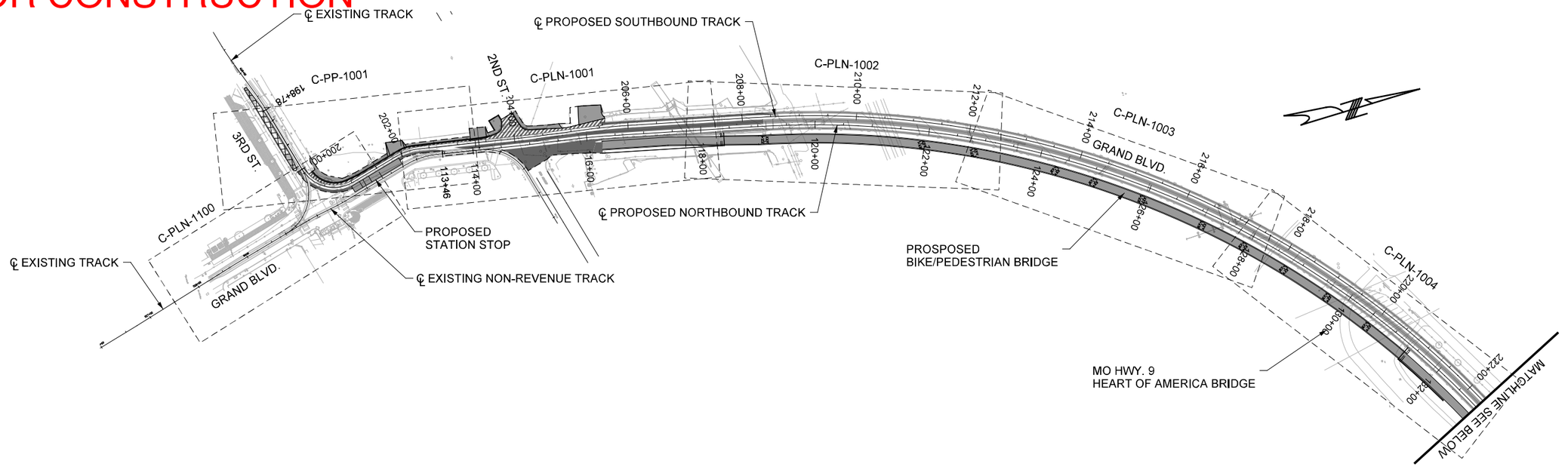

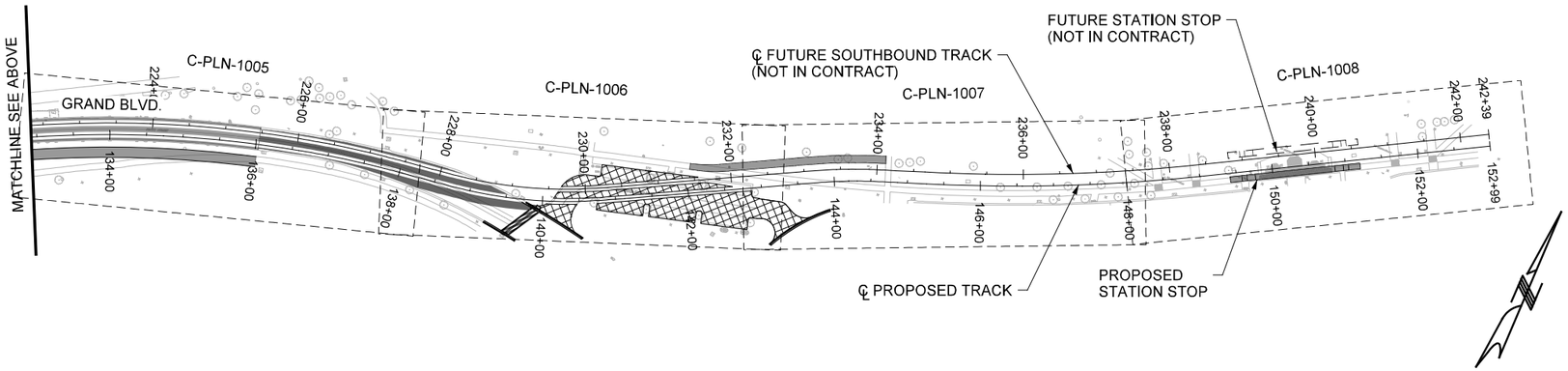

GENERAL NOTES

1. SHEET NUMBERS REFER TO PLAN AND PROFILE SHEET NUMBERING.

SCALE
0 100 200 300

REV	DATE	DESCRIPTION

PLOT DATE: 1/30/2019 4:32:04 PM

DESIGNED BY	BMV
CHECKED BY	DHT
DRAWN BY	AR
CHECKED BY	BMV
APPROVED BY	DHT
DATE	

30% DESIGN DATE: 01-31-2019

BURNS McDONNELL
9400 Ward Parkway
Kansas City, MO 64114
(816) 333-9400

NOT FOR CONSTRUCTION

RIVERFRONT STREETCAR EXTENSION

ROAD KEY MAP

SCALE FOR 22"x34":	1"=100'
FILENAME:	C-001.dgn
CONTRACT NO.:	XXXXXXXXX
CERTIFICATE OF AUTHORITY:	XXXXXXXXXX
DRAWING NO.:	C-001
SHEET NO.:	15

1-31-19
30% DESIGN
NOT FOR CONSTRUCTION

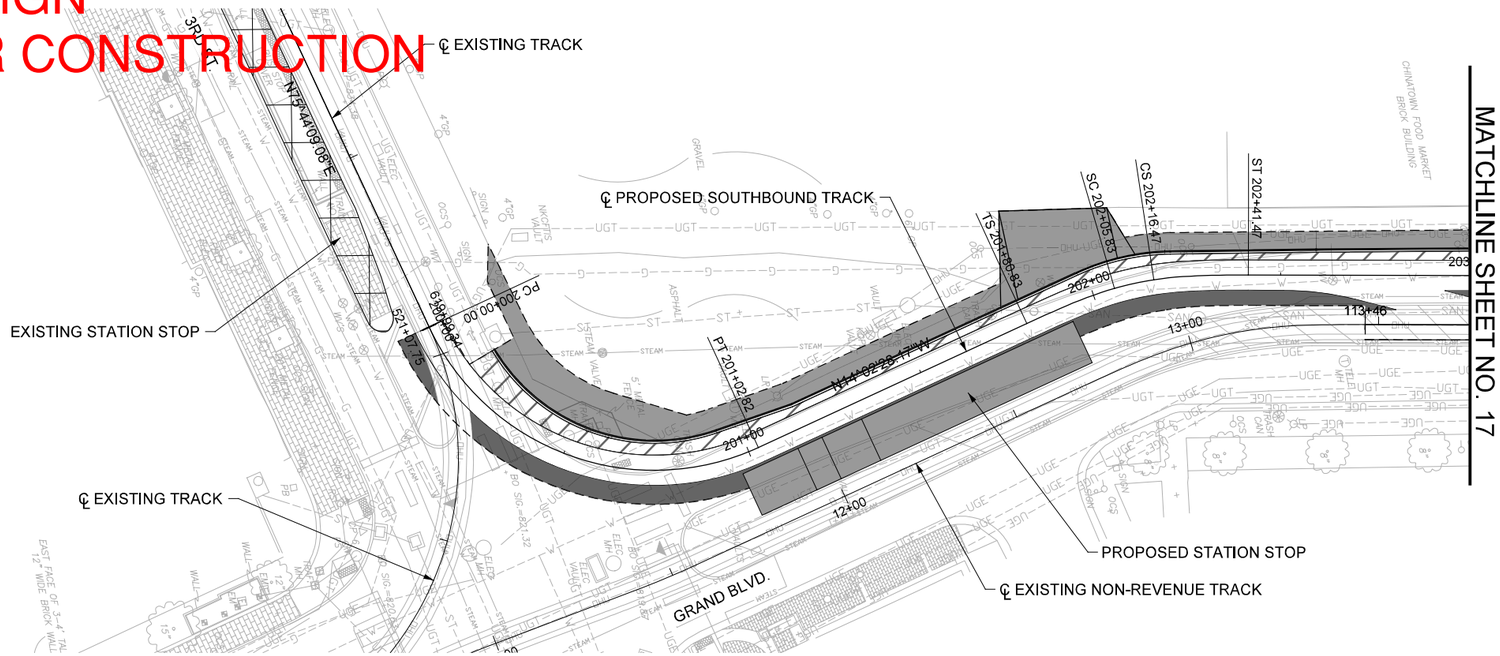

LEGEND

- 2" MILL & OVERLAY
- CONCRETE
- FULL DEPTH ASPHALT
- REMOVAL

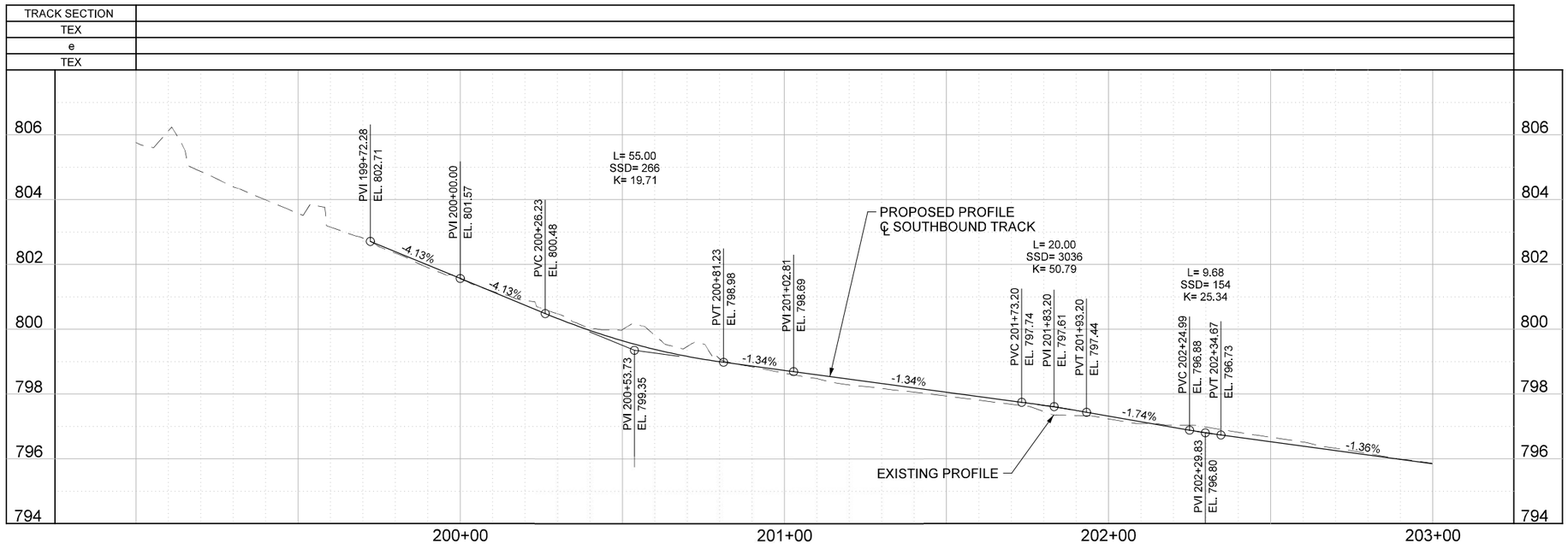

GENERAL NOTES

1. PROFILE SHOWN IS AT A 30% LEVEL AND INTENDED TO ILLUSTRATE THE EXISTING STREET GRADES AND TO CONFIRM PLATFORM LOCATIONS.

2. ALL ELEVATIONS AND DIMENSIONS GIVEN ARE IN FEET UNLESS OTHERWISE NOTED.

3. ALL CURVES ARE BASED ON ARC DEFINITION.

4. PROFILES DESIGNED TO FINAL TOP OF RAIL ELEVATION.

SCALE
0 20 40 60

REV	DATE	DESCRIPTION

PLOT DATE: 1/30/2019 4:32:16 PM

DESIGNED BY	BMV
CHECKED BY	DHT
DRAWN BY	AR
CHECKED BY	BMV
APPROVED BY	DHT
DATE	

RideKC STREETCAR

30% DESIGN DATE: 01-31-2019

BURNS McDONNELL
9400 Ward Parkway
Kansas City, MO 64114
(816) 333-9400

NOT FOR CONSTRUCTION

RIVERFRONT STREETCAR EXTENSION

SOUTHBOUND TRACK
PLAN AND PROFILE
GRAND BOULEVARD
SB STA. 200+00 TO 203+00

SCALE FOR 22"x34":	H: 1"=20' V: 1"=2'
FILENAME:	C-PP-1001.dgn
CONTRACT NO.:	XXXXXXXXX
CERTIFICATE OF AUTHORITY:	XXXXXXXXXX
DRAWING NO.:	C-PP-1001
SHEET NO.:	16

1-31-19
30% DESIGN
NOT FOR CONSTRUCTION

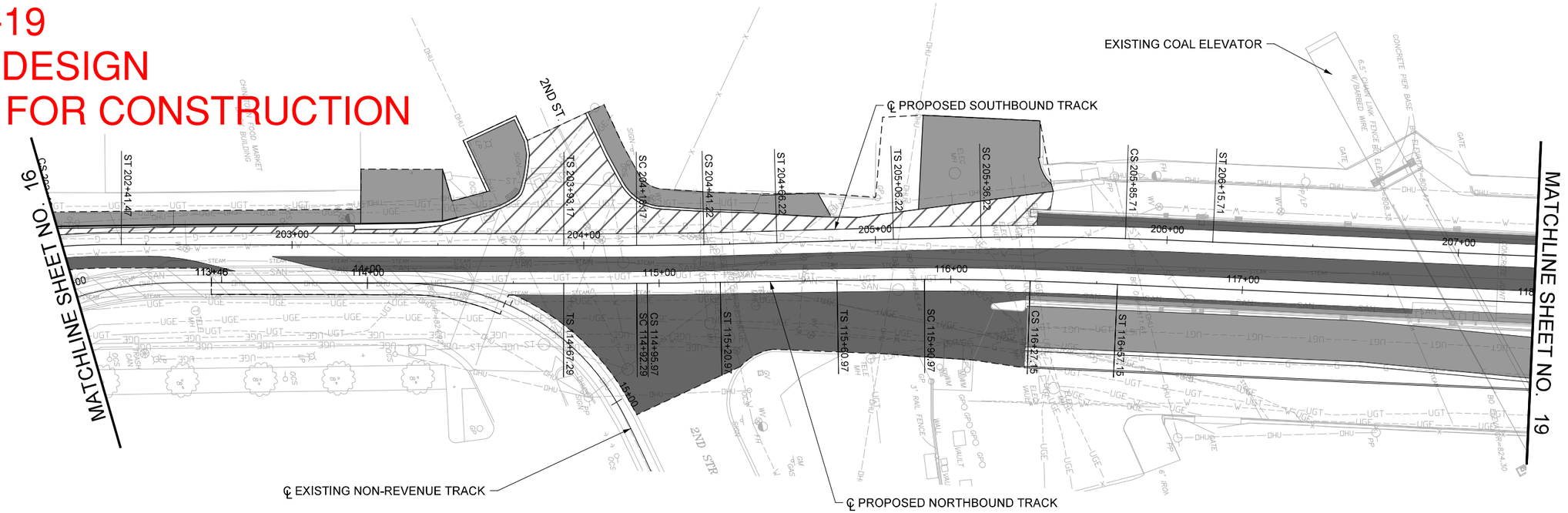

LEGEND

- 4" MILL & OVERLAY
- CONCRETE
- FULL DEPTH ASPHALT

GENERAL NOTES

1. PROFILE SHOWN IS AT A 30% LEVEL AND INTENDED TO ILLUSTRATE THE EXISTING STREET GRADES AND TO CONFIRM PLATFORM LOCATIONS.

2. ALL ELEVATIONS AND DIMENSIONS GIVEN ARE IN FEET UNLESS OTHERWISE NOTED.

3. ALL CURVES ARE BASED ON ARC DEFINITION.

4. PROFILES DESIGNED TO FINAL TOP OF RAIL ELEVATION.

SCALE
0 20 40 60

REV	DATE	DESCRIPTION

PLOT DATE: 1/30/2019 4:32:24 PM

DESIGNED BY	BMV
CHECKED BY	DHT
DRAWN BY	AR
CHECKED BY	BMV
APPROVED BY	DHT
DATE	

RideKC STREETCAR

30% DESIGN DATE: 01-31-2019

BURNS McDONNELL
9400 Ward Parkway
Kansas City, MO 64114
(816) 333-9400

NOT FOR CONSTRUCTION

RIVERFRONT STREETCAR EXTENSION

NORTHBOUND AND SOUTHBOUND TRACK
PLAN
GRAND BOULEVARD
NB STA. 113+00 TO 118+00

SCALE FOR 22"x34":	1"=20'
FILENAME:	C-PLN-1001.dgn
CONTRACT NO.:	XXXXXXXXX
CERTIFICATE OF AUTHORITY:	XXXXXXXXXX
DRAWING NO.:	C-PLN-1001
SHEET NO.:	17

1-31-19
30% DESIGN
NOT FOR CONSTRUCTION

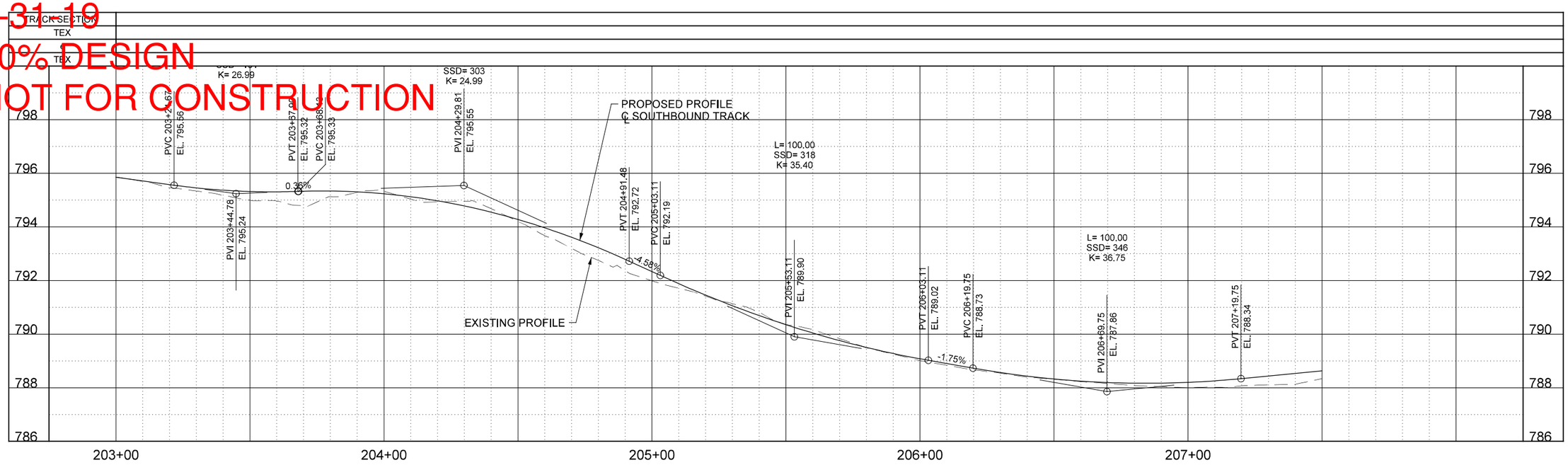

SOUTHBOUND TRACK PROFILE

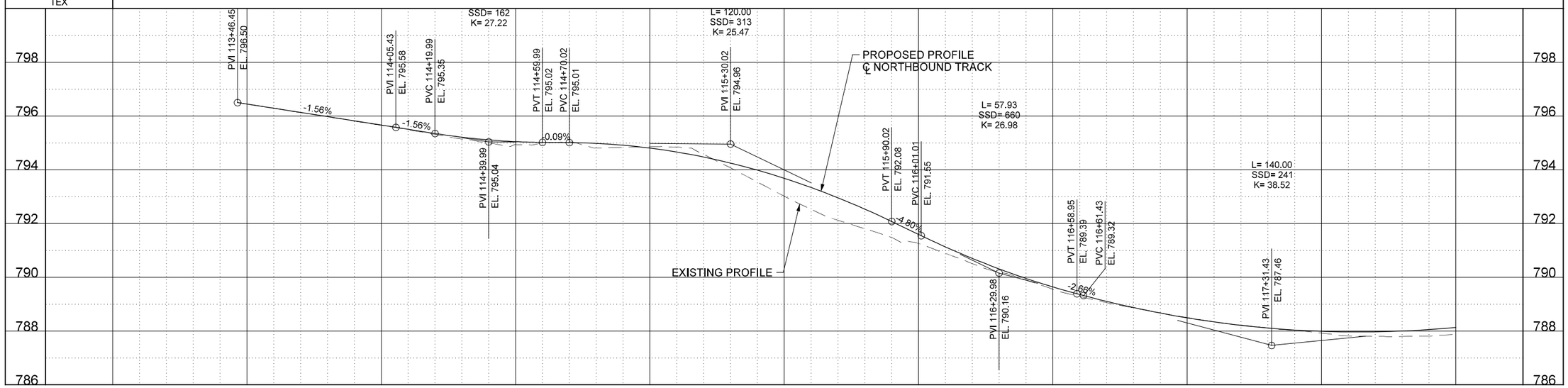

NORTHBOUND TRACK PROFILE

REV	DATE	DESCRIPTION

PLOT DATE: 1/30/2019 4:32:29 PM

DESIGNED BY	BMV
CHECKED BY	DHT
DRAWN BY	AR
CHECKED BY	BMV
APPROVED BY	DHT
DATE	

RideKC STREETCAR

30% DESIGN DATE: 01-31-2019

BURNS McDONNELL
9400 Ward Parkway
Kansas City, MO 64114
(816) 333-9400

NOT FOR CONSTRUCTION

RIVERFRONT STREETCAR EXTENSION

NORTHBOUND AND SOUTHBOUND TRACK
PROFILE
GRAND BOULEVARD
NB STA. 113+00 TO 118+00

SCALE FOR 22"x34":	H: 1"=20' V: 1"=2'
FILENAME:	C-PRO-1001.dgn
CONTRACT NO.:	XXXXXXXXX
CERTIFICATE OF AUTHORITY:	XXXXXXXXXX
DRAWING NO.:	C-PRO-1001
SHEET NO.:	18

1-31-19
30% DESIGN
NOT FOR CONSTRUCTION

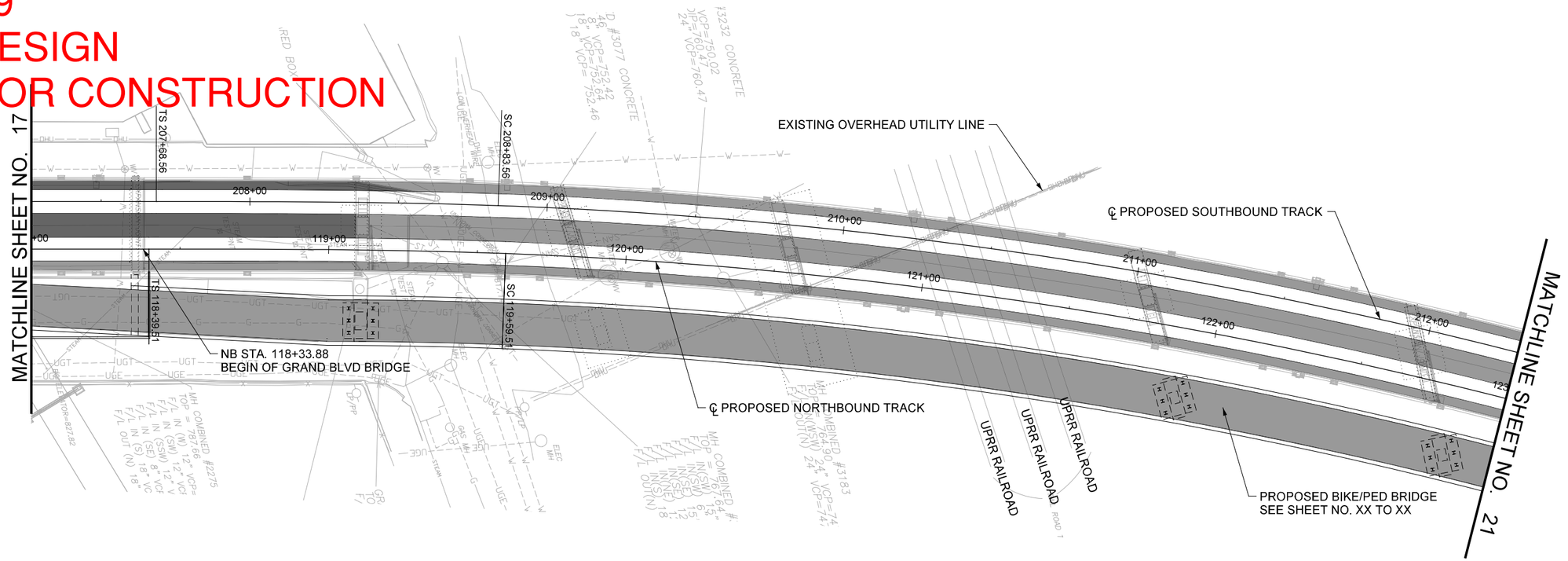

LEGEND

- 2" MILL & OVERLAY
- CONCRETE

GENERAL NOTES

1. PROFILE SHOWN IS AT A 30% LEVEL AND INTENDED TO ILLUSTRATE THE EXISTING STREET GRADES AND TO CONFIRM PLATFORM LOCATIONS.

2. ALL ELEVATIONS AND DIMENSIONS GIVEN ARE IN FEET UNLESS OTHERWISE NOTED.

3. ALL CURVES ARE BASED ON ARC DEFINITION.

4. PROFILES DESIGNED TO FINAL TOP OF RAIL ELEVATION.

SCALE
0 20 40 60

REV	DATE	DESCRIPTION

PLOT DATE: 1/30/2019 4:32:43 PM

DESIGNED BY	BMV
CHECKED BY	DHT
DRAWN BY	AR
CHECKED BY	BMV
APPROVED BY	DHT
DATE	

RideKC STREETCAR

30% DESIGN DATE: 01-31-2019

BURNS McDONNELL
9400 Ward Parkway
Kansas City, MO 64114
(816) 333-9400

NOT FOR CONSTRUCTION

RIVERFRONT STREETCAR EXTENSION

NORTHBOUND AND SOUTHBOUND TRACK
PLAN
GRAND BOULEVARD
NB STA. 118+00 TO 123+00

SCALE FOR 22"x34":	1"=20'
FILENAME:	C-PLN-1002.dgn
CONTRACT NO.:	XXXXXXXXX
CERTIFICATE OF AUTHORITY:	XXXXXXXXXX
DRAWING NO.:	C-PLN-1002
SHEET NO.:	19

1-31-19
30% DESIGN
NOT FOR CONSTRUCTION

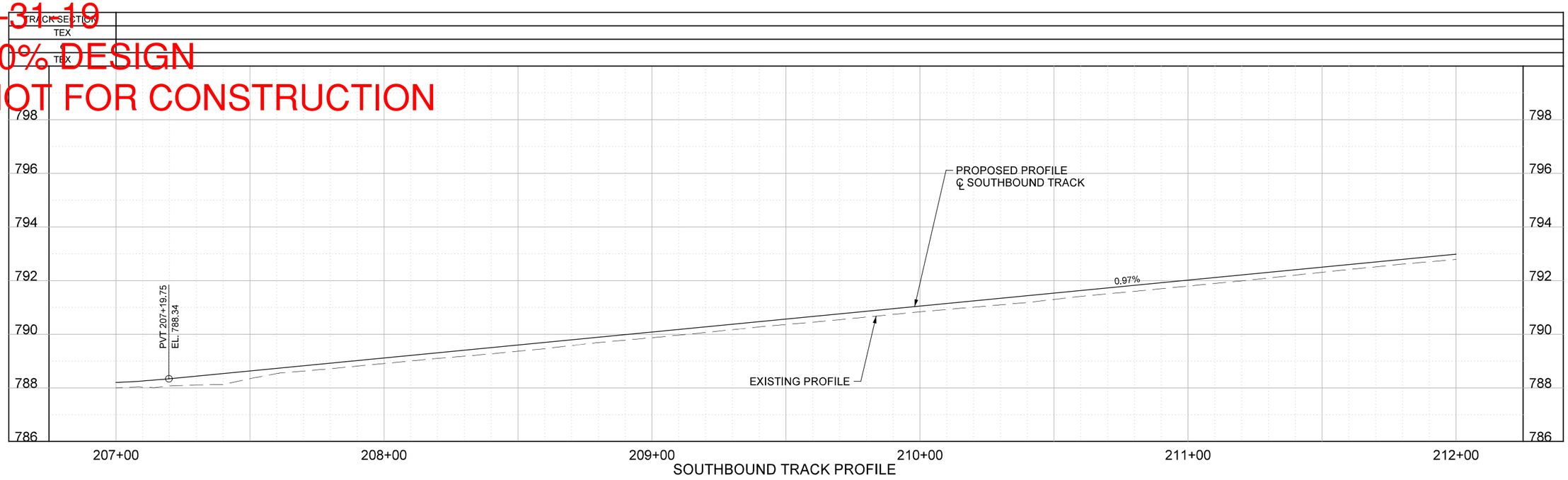

SOUTHBOUND TRACK PROFILE

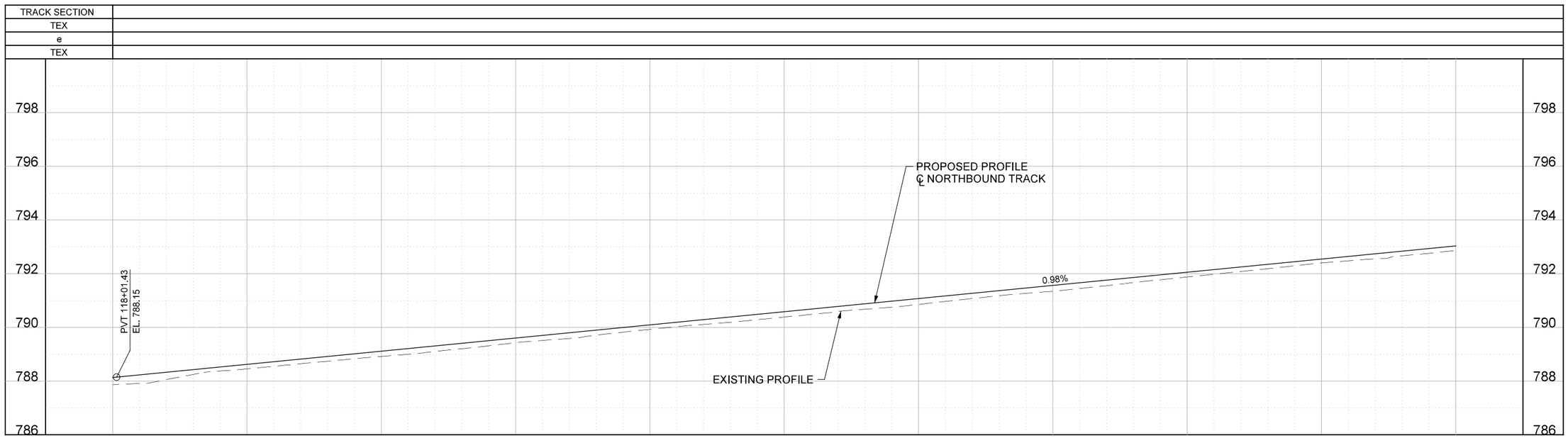

NORTHBOUND TRACK PROFILE

REV	DATE	DESCRIPTION

PLOT DATE: 1/30/2019 4:32:48 PM

DESIGNED BY	BMV
CHECKED BY	DHT
DRAWN BY	AR
CHECKED BY	BMV
APPROVED BY	DHT
DATE	

RideKC STREETCAR

30% DESIGN DATE: 01-31-2019

BURNS McDONNELL
9400 Ward Parkway
Kansas City, MO 64114
(816) 333-9400

NOT FOR CONSTRUCTION

RIVERFRONT STREETCAR EXTENSION

NORTHBOUND AND SOUTHBOUND TRACK
PROFILE
GRAND BOULEVARD
NB STA. 118+00 TO 123+00

SCALE FOR 22"x34":	H: 1"=20' V: 1"=2'
FILENAME:	C-PRO-1002.dgn
CONTRACT NO.:	XXXXXXXXX
CERTIFICATE OF AUTHORITY:	XXXXXXXXXX
DRAWING NO.:	C-PRO-1002
SHEET NO.:	20

1-31-19
30% DESIGN
NOT FOR CONSTRUCTION

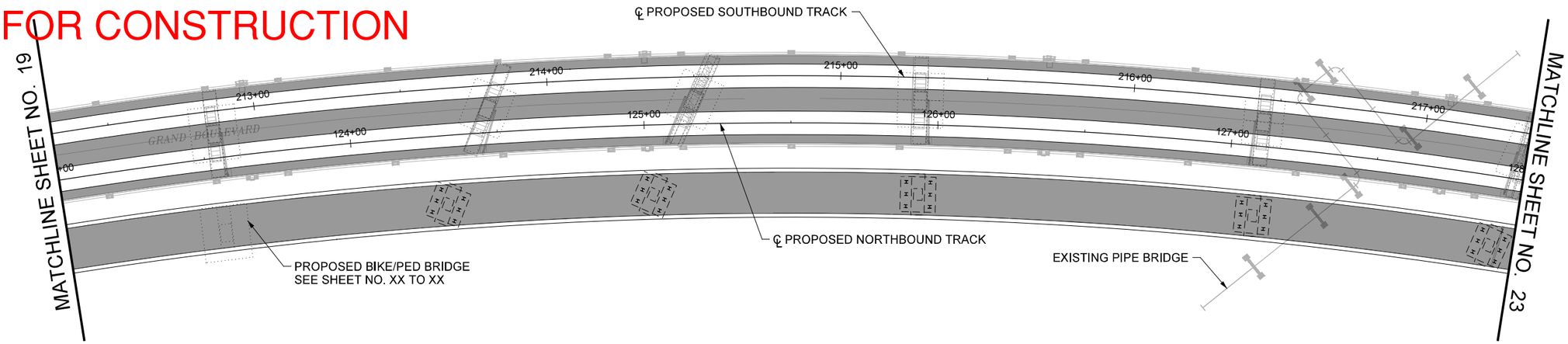

LEGEND

- 2" MILL & OVERLAY
- CONCRETE

GENERAL NOTES

1. PROFILE SHOWN IS AT A 30% LEVEL AND INTENDED TO ILLUSTRATE THE EXISTING STREET GRADES AND TO CONFIRM PLATFORM LOCATIONS.

2. ALL ELEVATIONS AND DIMENSIONS GIVEN ARE IN FEET UNLESS OTHERWISE NOTED.

3. ALL CURVES ARE BASED ON ARC DEFINITION.

4. PROFILES DESIGNED TO FINAL TOP OF RAIL ELEVATION.

SCALE
0 20 40 60

REV	DATE	DESCRIPTION

PLOT DATE: 1/30/2019 4:33:04 PM

DESIGNED BY	BMV
CHECKED BY	DHT
DRAWN BY	AR
CHECKED BY	BMV
APPROVED BY	DHT
DATE	

RideKC STREETCAR

30% DESIGN DATE: 01-31-2019

BURNS McDONNELL
9400 Ward Parkway
Kansas City, MO 64114
(816) 333-9400

NOT FOR CONSTRUCTION

RIVERFRONT STREETCAR EXTENSION

NORTHBOUND AND SOUTHBOUND TRACK
PLAN
GRAND BOULEVARD
NB STA. 123+00 TO 128+00

SCALE FOR 22"x34":	1"=20'
FILENAME:	C-PLN-1003.dgn
CONTRACT NO.:	XXXXXXXXX
CERTIFICATE OF AUTHORITY:	XXXXXXXXXX
DRAWING NO.:	C-PLN-1003
SHEET NO.:	21

1-31-19
30% DESIGN
NOT FOR CONSTRUCTION

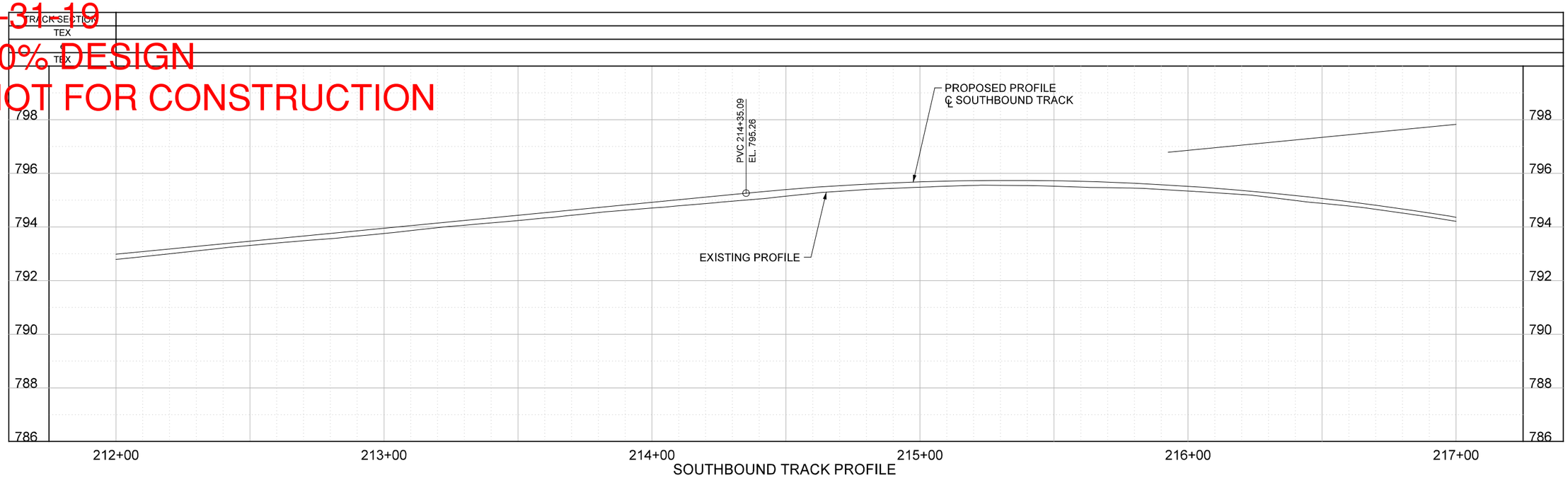

SOUTHBOUND TRACK PROFILE

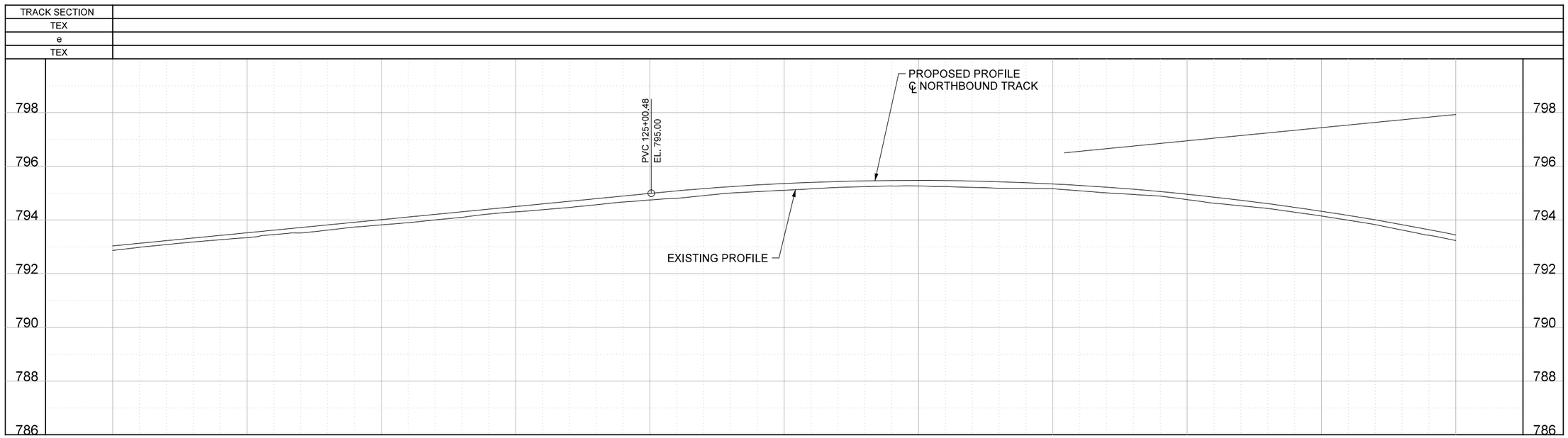

NORTHBOUND TRACK PROFILE

REV	DATE	DESCRIPTION

PLOT DATE: 1/30/2019 4:33:08 PM

DESIGNED BY	BMV
CHECKED BY	DHT
DRAWN BY	AR
CHECKED BY	BMV
APPROVED BY	DHT
DATE	

RideKC STREETCAR

30% DESIGN DATE: 01-31-2019

BURNS McDONNELL
9400 Ward Parkway
Kansas City, MO 64114
(816) 333-9400

NOT FOR CONSTRUCTION

RIVERFRONT STREETCAR EXTENSION

NORTHBOUND AND SOUTHBOUND TRACK
PROFILE
GRAND BOULEVARD
NB STA. 123+00 TO 128+00

SCALE FOR 22"x34":	H: 1"=20' V: 1"=2'
FILENAME:	C-PRO-1003.dgn
CONTRACT NO.:	XXXXXXXXX
CERTIFICATE OF AUTHORITY:	XXXXXXXXXX
DRAWING NO.:	C-PRO-1003
SHEET NO.:	22

1-31-19
30% DESIGN
NOT FOR CONSTRUCTION

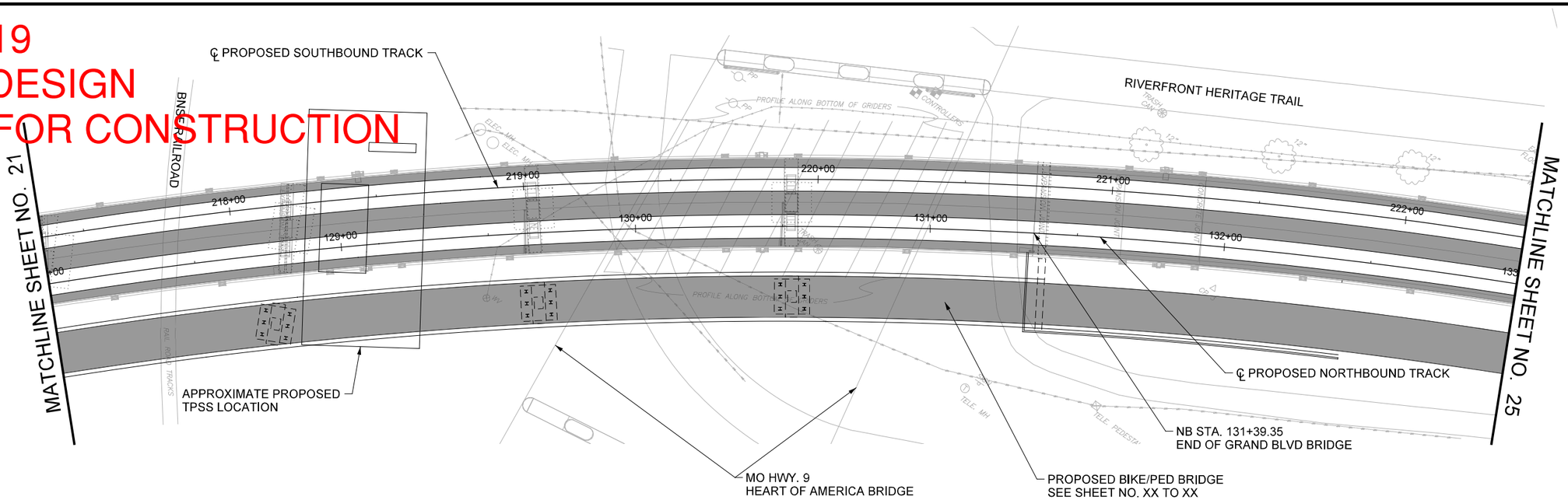

LEGEND

- 2" MILL & OVERLAY
- CONCRETE

GENERAL NOTES

1. PROFILE SHOWN IS AT A 30% LEVEL AND INTENDED TO ILLUSTRATE THE EXISTING STREET GRADES AND TO CONFIRM PLATFORM LOCATIONS.

2. ALL ELEVATIONS AND DIMENSIONS GIVEN ARE IN FEET UNLESS OTHERWISE NOTED.

3. ALL CURVES ARE BASED ON ARC DEFINITION.

4. PROFILES DESIGNED TO FINAL TOP OF RAIL ELEVATION.

SCALE
0 20 40 60

REV	DATE	DESCRIPTION

PLOT DATE: 1/30/2019 4:33:26 PM

DESIGNED BY	BMV
CHECKED BY	DHT
DRAWN BY	AR
CHECKED BY	BMV
APPROVED BY	DHT
DATE	

RideKC STREETCAR

30% DESIGN DATE: 01-31-2019

BURNS McDONNELL
9400 Ward Parkway
Kansas City, MO 64114
(816) 333-9400

NOT FOR CONSTRUCTION

RIVERFRONT STREETCAR EXTENSION

NORTHBOUND AND SOUTHBOUND TRACK
PLAN
GRAND BOULEVARD
NB STA. 128+00 TO 133+00

SCALE FOR 22"x34":	1"=20'
FILENAME:	C-PLN-1004.dgn
CONTRACT NO.:	XXXXXXXXX
CERTIFICATE OF AUTHORITY:	XXXXXXXXXX
DRAWING NO.:	C-PLN-1004
SHEET NO.:	23

1-31-19
30% DESIGN
NOT FOR CONSTRUCTION

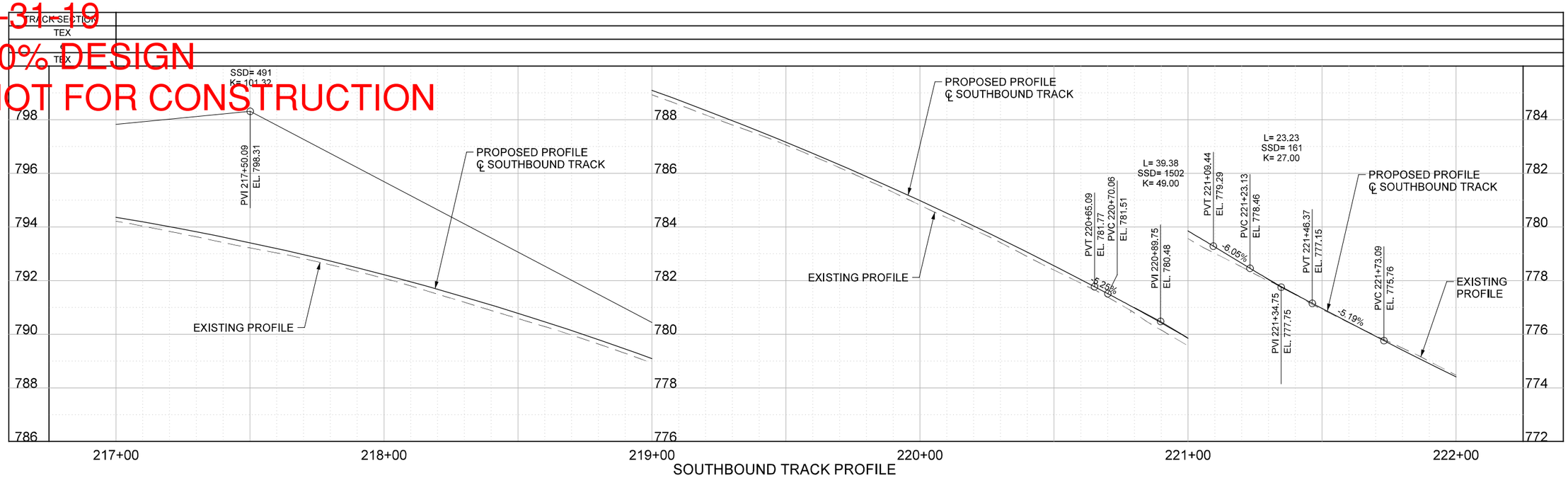

SOUTHBOUND TRACK PROFILE

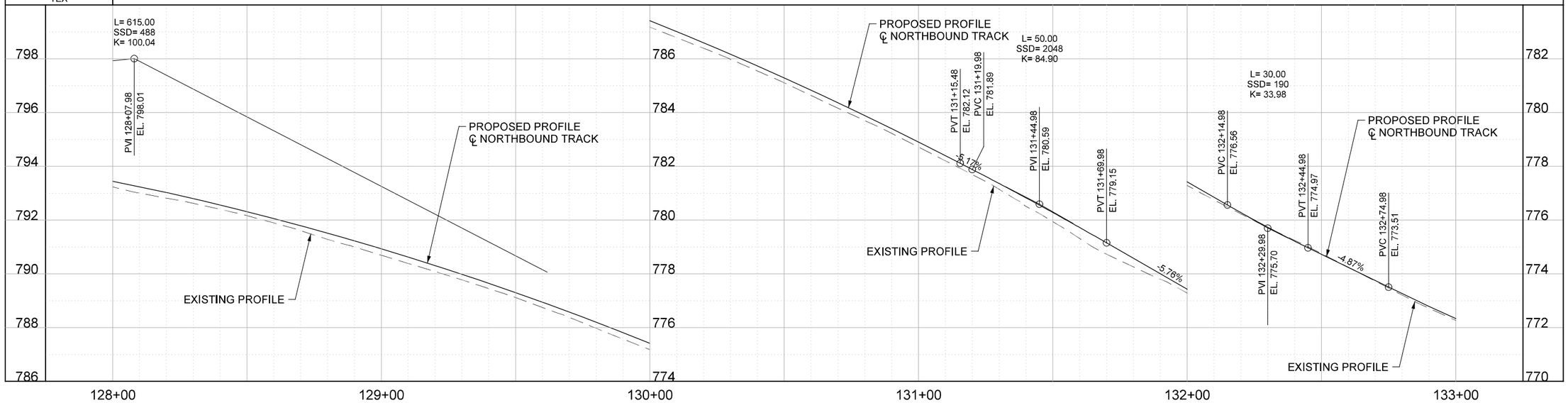

NORTHBOUND TRACK PROFILE

REV	DATE	DESCRIPTION

PLOT DATE: 1/30/2019 4:33:32 PM

DESIGNED BY	BMV
CHECKED BY	DHT
DRAWN BY	AR
CHECKED BY	BMV
APPROVED BY	DHT
DATE	

RideKC STREETCAR

30% DESIGN DATE: 01-31-2019

BURNS McDONNELL
9400 Ward Parkway
Kansas City, MO 64114
(816) 333-9400

NOT FOR CONSTRUCTION

RIVERFRONT STREETCAR EXTENSION

NORTHBOUND AND SOUTHBOUND TRACK
PROFILE
GRAND BOULEVARD
NB STA. 128+00 TO 133+00

SCALE FOR 22"x34":	H: 1"=20' V: 1"=2'
FILENAME:	C-PRO-1004.dgn
CONTRACT NO.:	XXXXXXXXX
CERTIFICATE OF AUTHORITY:	XXXXXXXXXX
DRAWING NO.:	C-PRO-1004
SHEET NO.:	24

1-31-19
30% DESIGN
NOT FOR CONSTRUCTION

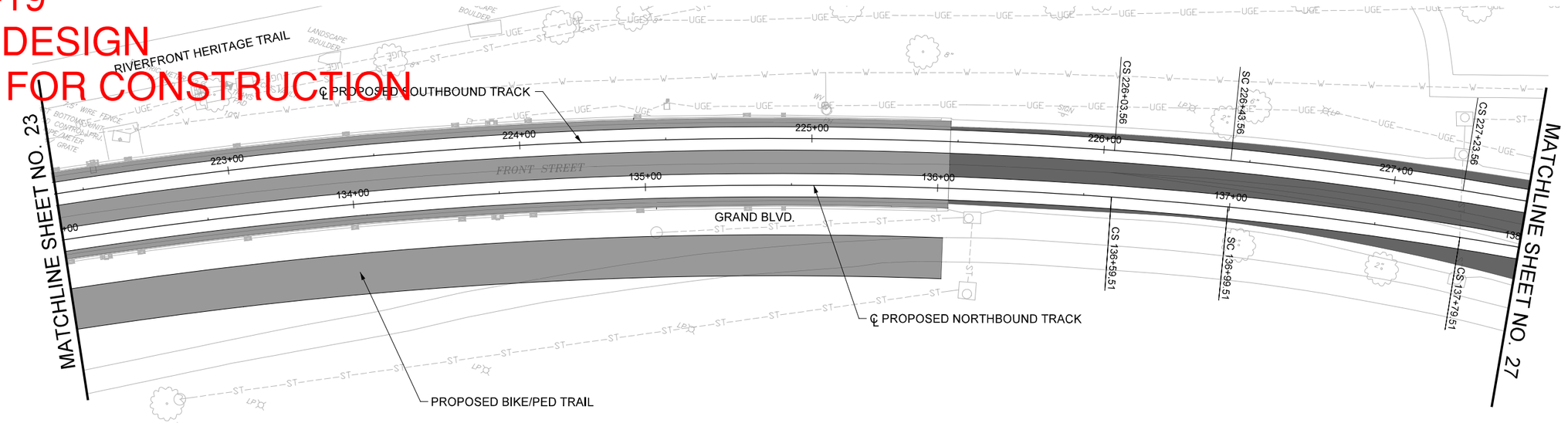

LEGEND

- 2" MILL & OVERLAY
- CONCRETE

GENERAL NOTES

1. PROFILE SHOWN IS AT A 30% LEVEL AND INTENDED TO ILLUSTRATE THE EXISTING STREET GRADES AND TO CONFIRM PLATFORM LOCATIONS.

2. ALL ELEVATIONS AND DIMENSIONS GIVEN ARE IN FEET UNLESS OTHERWISE NOTED.

3. ALL CURVES ARE BASED ON ARC DEFINITION.

4. PROFILES DESIGNED TO FINAL TOP OF RAIL ELEVATION.

SCALE
0 20 40 60

REV	DATE	DESCRIPTION

PLOT DATE: 1/30/2019 4:33:46 PM

DESIGNED BY	BMV
CHECKED BY	DHT
DRAWN BY	AR
CHECKED BY	BMV
APPROVED BY	DHT
DATE	

RideKC STREETCAR

30% DESIGN DATE: 01-31-2019

BURNS McDONNELL
9400 Ward Parkway
Kansas City, MO 64114
(816) 333-9400

NOT FOR CONSTRUCTION

RIVERFRONT STREETCAR EXTENSION

NORTHBOUND AND SOUTHBOUND TRACK
PLAN
GRAND BOULEVARD
NB STA. 133+00 TO 138+00

SCALE FOR 22"x34":	1"=20'
FILENAME:	C-PLN-1005.dgn
CONTRACT NO.:	XXXXXXXXX
CERTIFICATE OF AUTHORITY:	XXXXXXXXXX
DRAWING NO.:	C-PLN-1005
SHEET NO.:	25

1-31-19
30% DESIGN
NOT FOR CONSTRUCTION

TRACK SECTION
TEX
TEX

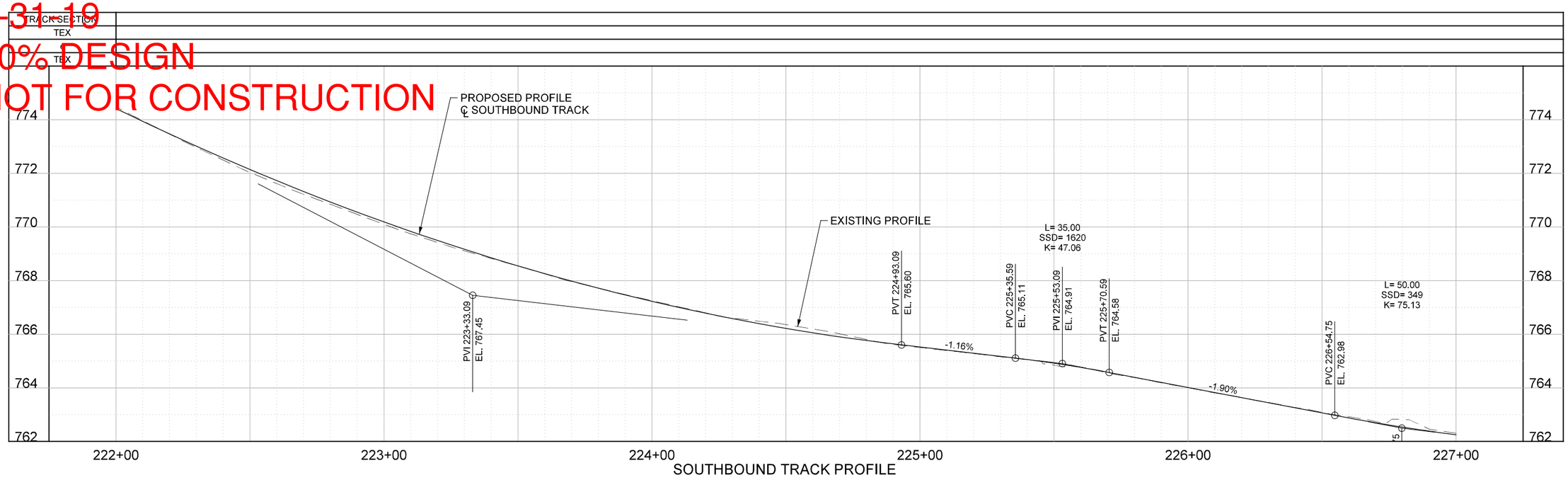

SOUTHBOUND TRACK PROFILE

TRACK SECTION
TEX
e
TEX

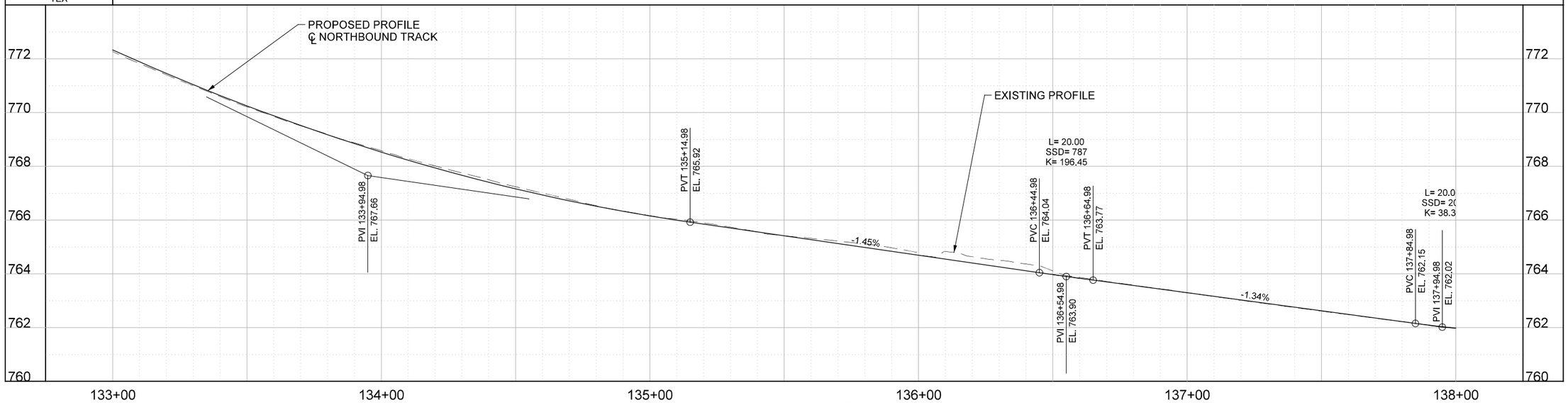

NORTHBOUND TRACK PROFILE

REV	DATE	DESCRIPTION

PLOT DATE: 1/30/2019 4:33:51 PM

DESIGNED BY	BMV
CHECKED BY	DHT
DRAWN BY	AR
CHECKED BY	BMV
APPROVED BY	DHT
DATE	

RideKC STREETCAR

30% DESIGN DATE: 01-31-2019

BURNS McDONNELL
9400 Ward Parkway
Kansas City, MO 64114
(816) 333-9400

NOT FOR CONSTRUCTION

RIVERFRONT STREETCAR EXTENSION

NORTHBOUND AND SOUTHBOUND TRACK
PROFILE
GRAND BOULEVARD
NB STA. 133+00 TO 138+00

SCALE FOR 22"x34":	H: 1"=20' V: 1"=2'
FILENAME:	C-PRO-1005.dgn
CONTRACT NO.:	XXXXXXXXX
CERTIFICATE OF AUTHORITY:	XXXXXXXXXX
DRAWING NO.:	C-PRO-1005
SHEET NO.:	26

1-31-19
30% DESIGN
NOT FOR CONSTRUCTION

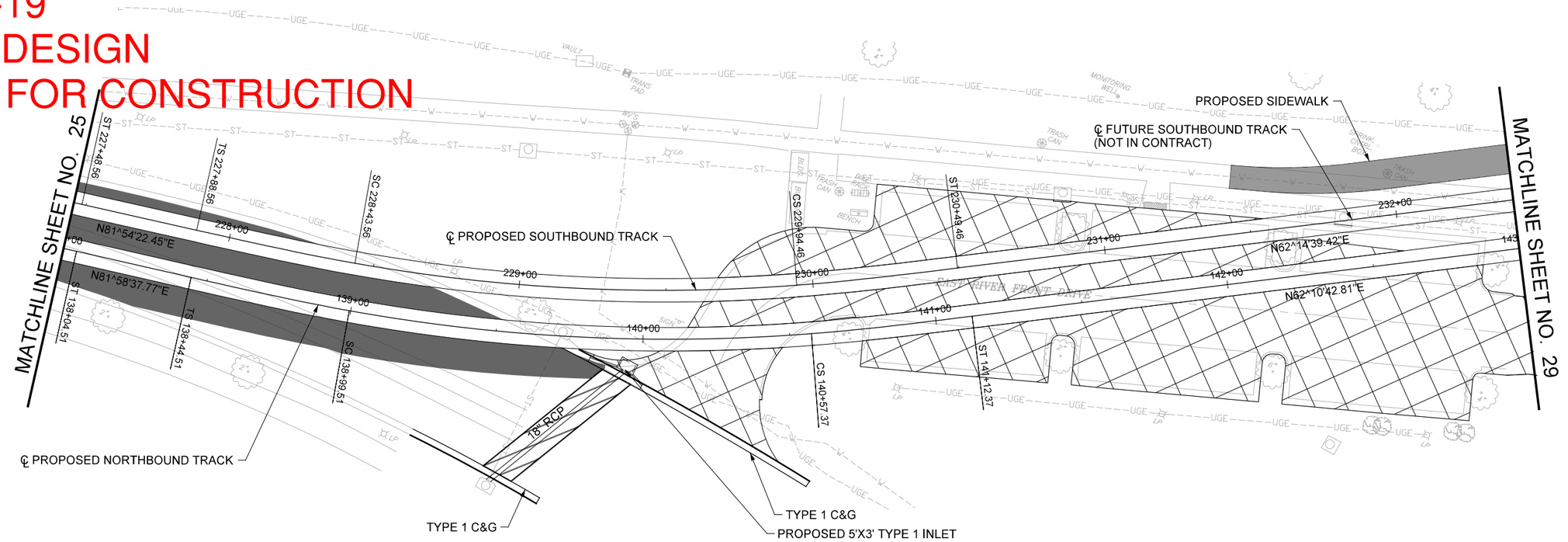

LEGEND

- 2" MILL & OVERLAY
- CONCRETE
- FULL DEPTH ASPHALT
- REMOVAL

GENERAL NOTES

1. PROFILE SHOWN IS AT A 30% LEVEL AND INTENDED TO ILLUSTRATE THE EXISTING STREET GRADES AND TO CONFIRM PLATFORM LOCATIONS.

2. ALL ELEVATIONS AND DIMENSIONS GIVEN ARE IN FEET UNLESS OTHERWISE NOTED.

3. ALL CURVES ARE BASED ON ARC DEFINITION.

4. PROFILES DESIGNED TO FINAL TOP OF RAIL ELEVATION.

SCALE
0 20 40 60

REV	DATE	DESCRIPTION

PLOT DATE: 1/30/2019 4:34:07 PM

DESIGNED BY	BMV
CHECKED BY	DHT
DRAWN BY	AR
CHECKED BY	BMV
APPROVED BY	DHT
DATE	

RideKC STREETCAR

30% DESIGN DATE: 01-31-2019

BURNS McDONNELL
9400 Ward Parkway
Kansas City, MO 64114
(816) 333-9400

NOT FOR CONSTRUCTION

RIVERFRONT STREETCAR EXTENSION

NORTHBOUND AND SOUTHBOUND TRACK
PLAN
GRAND BOULEVARD
NB STA. 138+00 TO 143+00

SCALE FOR 22"x34":	1"=20'
FILENAME:	C-PLN-1006.dgn
CONTRACT NO.:	XXXXXXXXX
CERTIFICATE OF AUTHORITY:	XXXXXXXXXX
DRAWING NO.:	C-PLN-1006
SHEET NO.:	27

1-31-19
30% DESIGN
NOT FOR CONSTRUCTION

TRACK SECTION
TEX
TEX

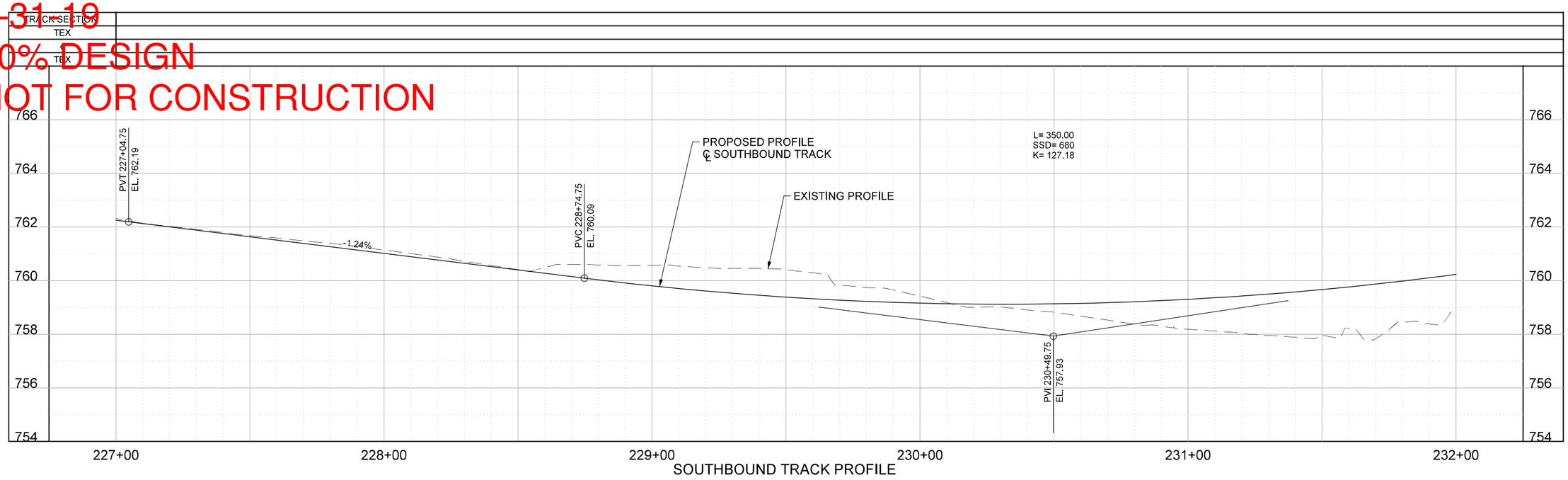

SOUTHBOUND TRACK PROFILE

TRACK SECTION
TEX
e
TEX

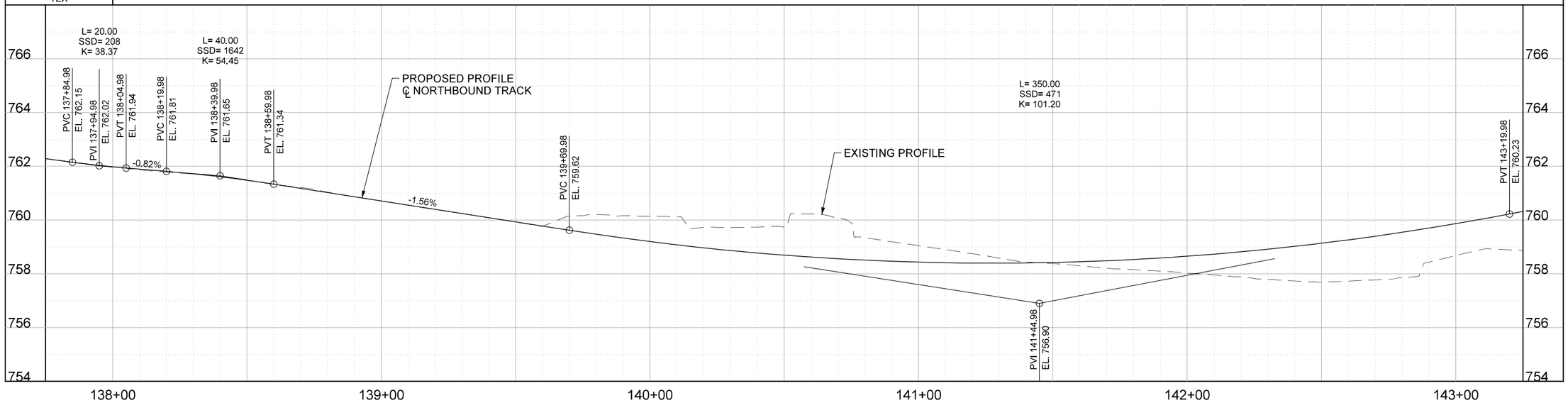

NORTHBOUND TRACK PROFILE

REV	DATE	DESCRIPTION

PLOT DATE: 1/30/2019 4:34:12 PM

DESIGNED BY	BMV
CHECKED BY	DHT
DRAWN BY	AR
CHECKED BY	BMV
APPROVED BY	DHT
DATE	

RideKC STREETCAR

30% DESIGN DATE: 01-31-2019

BURNS McDONNELL
9400 Ward Parkway
Kansas City, MO 64114
(816) 333-9400

NOT FOR CONSTRUCTION

RIVERFRONT STREETCAR EXTENSION

NORTHBOUND AND SOUTHBOUND TRACK
PROFILE
GRAND BOULEVARD
NB STA. 138+00 TO 143+00

SCALE FOR 22"x34":	H: 1"=20' V: 1"=2'
FILENAME:	C-PRO-1006.dgn
CONTRACT NO.:	XXXXXXXXX
CERTIFICATE OF AUTHORITY:	XXXXXXXXXX
DRAWING NO.:	C-PRO-1006
SHEET NO.:	28

1-31-19
30% DESIGN
NOT FOR CONSTRUCTION

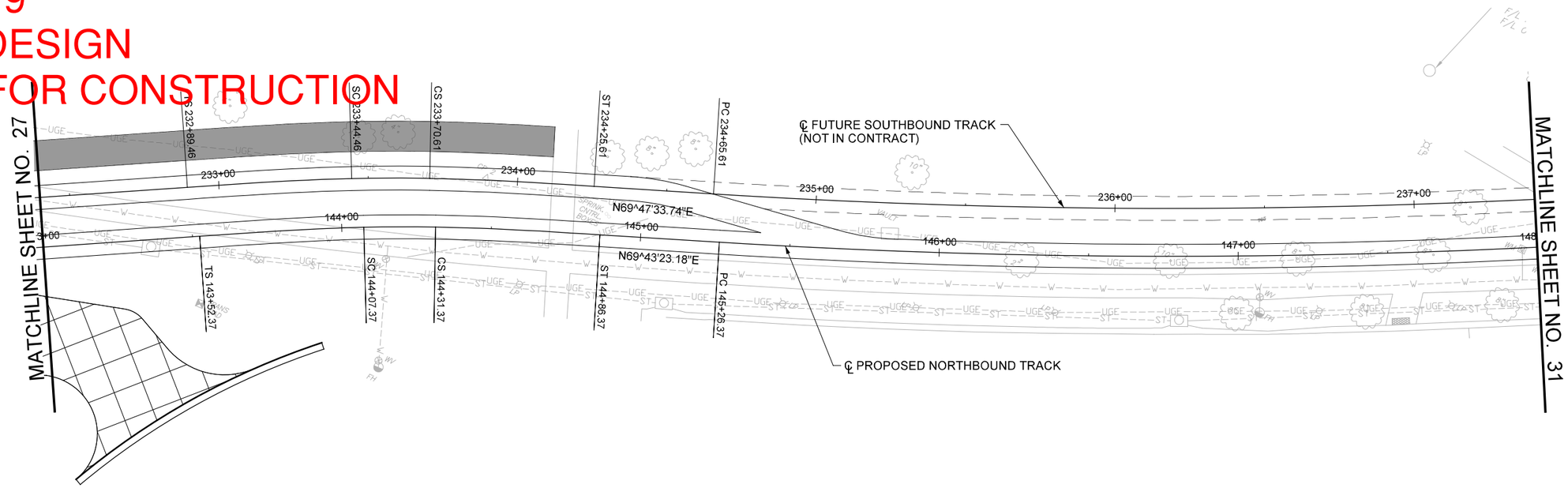

LEGEND

- 2" MILL & OVERLAY
- CONCRETE
- REMOVAL

GENERAL NOTES

1. PROFILE SHOWN IS AT A 30% LEVEL AND INTENDED TO ILLUSTRATE THE EXISTING STREET GRADES AND TO CONFIRM PLATFORM LOCATIONS.

2. ALL ELEVATIONS AND DIMENSIONS GIVEN ARE IN FEET UNLESS OTHERWISE NOTED.

3. ALL CURVES ARE BASED ON ARC DEFINITION.

4. PROFILES DESIGNED TO FINAL TOP OF RAIL ELEVATION.

SCALE
0 20 40 60

REV	DATE	DESCRIPTION

PLOT DATE: 1/30/2019 4:34:24 PM

DESIGNED BY	BMV
CHECKED BY	DHT
DRAWN BY	AR
CHECKED BY	BMV
APPROVED BY	DHT
DATE	

RideKC STREETCAR

30% DESIGN DATE: 01-31-2019

BURNS McDONNELL
9400 Ward Parkway
Kansas City, MO 64114
(816) 333-9400

NOT FOR CONSTRUCTION

RIVERFRONT STREETCAR EXTENSION

NORTHBOUND AND SOUTHBOUND TRACK
PLAN
GRAND BOULEVARD
NB STA. 143+00 TO 148+00

SCALE FOR 22"x34":	1"=20'
FILENAME:	C-PLN-1007.dgn
CONTRACT NO.:	XXXXXXXXX
CERTIFICATE OF AUTHORITY:	XXXXXXXXXX
DRAWING NO.:	C-PLN-1007
SHEET NO.:	29

1-31-19
30% DESIGN
NOT FOR CONSTRUCTION

TRACK SECTION
TEX
TEX

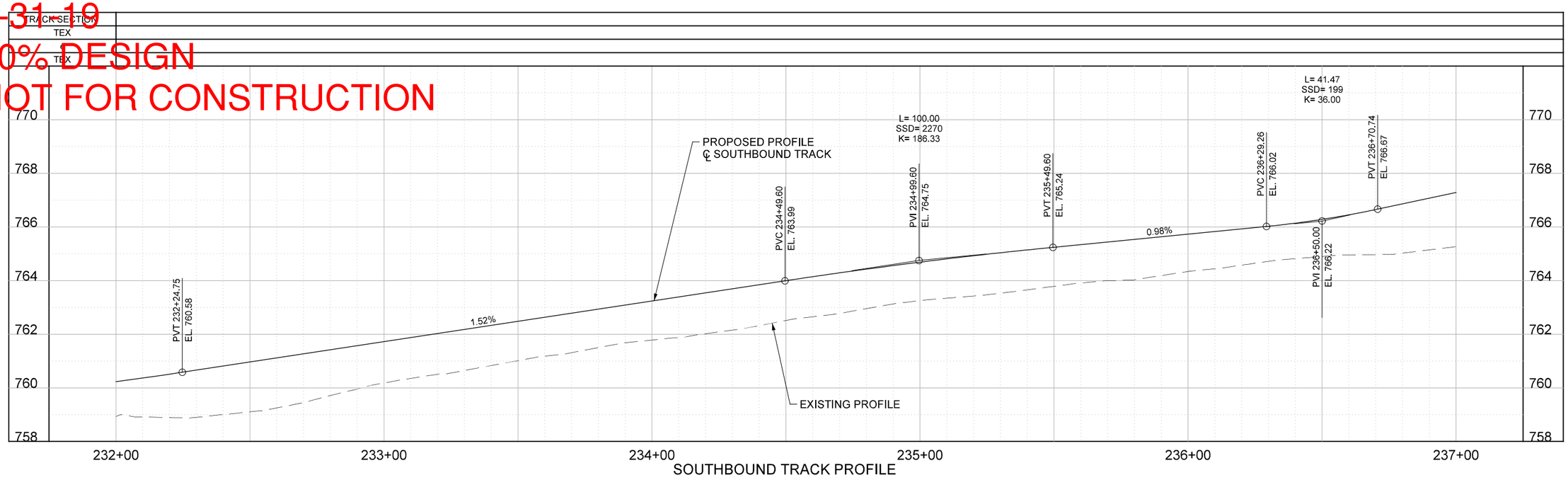

SOUTHBOUND TRACK PROFILE

TRACK SECTION
TEX
e
TEX

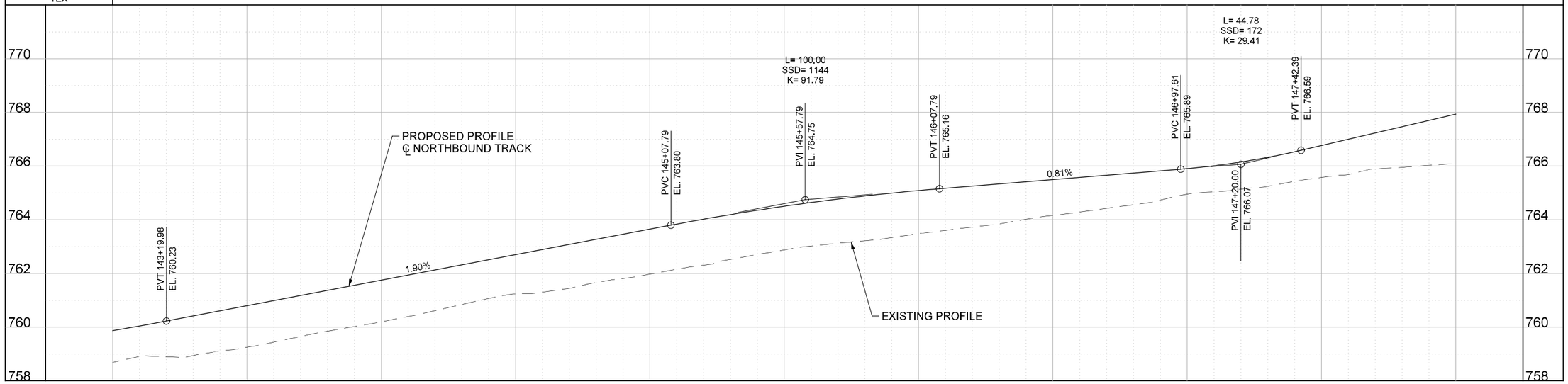

NORTHBOUND TRACK PROFILE

REV	DATE	DESCRIPTION

PLOT DATE: 1/30/2019 4:34:29 PM

DESIGNED BY	BMV
CHECKED BY	DHT
DRAWN BY	AR
CHECKED BY	BMV
APPROVED BY	DHT
DATE	

RideKC STREETCAR

30% DESIGN DATE: 01-31-2019

BURNS McDONNELL
9400 Ward Parkway
Kansas City, MO 64114
(816) 333-9400

NOT FOR CONSTRUCTION

RIVERFRONT STREETCAR EXTENSION

NORTHBOUND AND SOUTHBOUND TRACK
PROFILE
GRAND BOULEVARD
NB STA. 143+00 TO 148+00

SCALE FOR 22"x34":	H: 1"=20' V: 1"=2'
FILENAME:	C-PRO-1007.dgn
CONTRACT NO.:	XXXXXXXXX
CERTIFICATE OF AUTHORITY:	XXXXXXXXXX
DRAWING NO.:	C-PRO-1007
SHEET NO.:	30

1-31-19
30% DESIGN
NOT FOR CONSTRUCTION

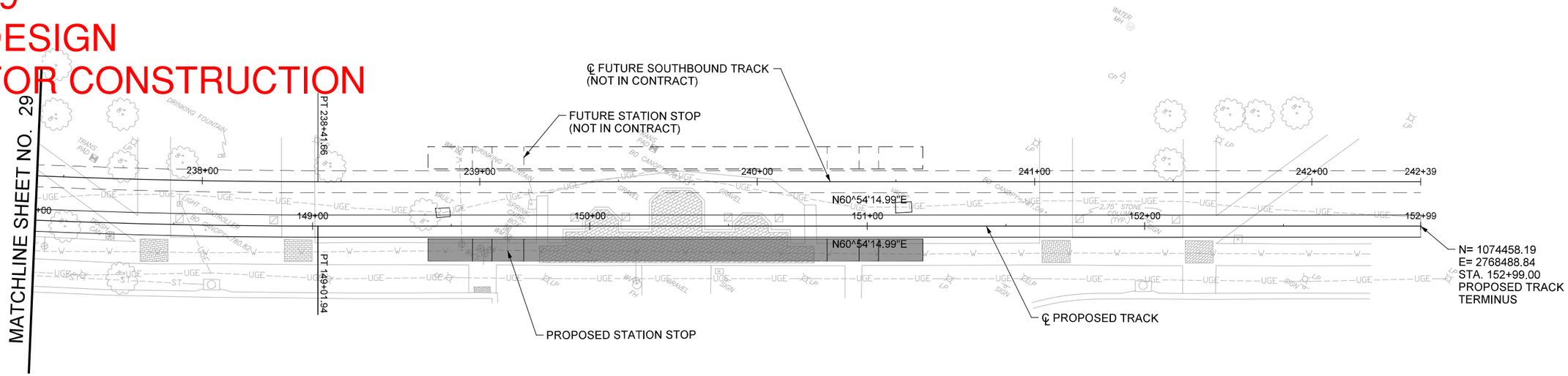

LEGEND

- 2" MILL & OVERLAY
- CONCRETE

GENERAL NOTES

1. PROFILE SHOWN IS AT A 30% LEVEL AND INTENDED TO ILLUSTRATE THE EXISTING STREET GRADES AND TO CONFIRM PLATFORM LOCATIONS.

2. ALL ELEVATIONS AND DIMENSIONS GIVEN ARE IN FEET UNLESS OTHERWISE NOTED.

3. ALL CURVES ARE BASED ON ARC DEFINITION.

4. PROFILES DESIGNED TO FINAL TOP OF RAIL ELEVATION.

SCALE
0 20 40 60

REV	DATE	DESCRIPTION

PLOT DATE: 1/30/2019 4:34:42 PM

DESIGNED BY	BMV
CHECKED BY	DHT
DRAWN BY	AR
CHECKED BY	BMV
APPROVED BY	DHT
DATE	

RideKC STREETCAR

30% DESIGN DATE: 01-31-2019

BURNS McDONNELL
9400 Ward Parkway
Kansas City, MO 64114
(816) 333-9400

NOT FOR CONSTRUCTION

RIVERFRONT STREETCAR EXTENSION

NORTHBOUND AND SOUTHBOUND TRACK
PLAN
GRAND BOULEVARD
NB STA. 148+00 TO 153+00

SCALE FOR 22"x34":	1"=20'
FILENAME:	C-PLN-1008.dgn
CONTRACT NO.:	XXXXXXXXX
CERTIFICATE OF AUTHORITY:	XXXXXXXXXX
DRAWING NO.:	C-PLN-1008
SHEET NO.:	31

1-31-19
30% DESIGN
NOT FOR CONSTRUCTION

TRACK SECTION
TEX
TEX

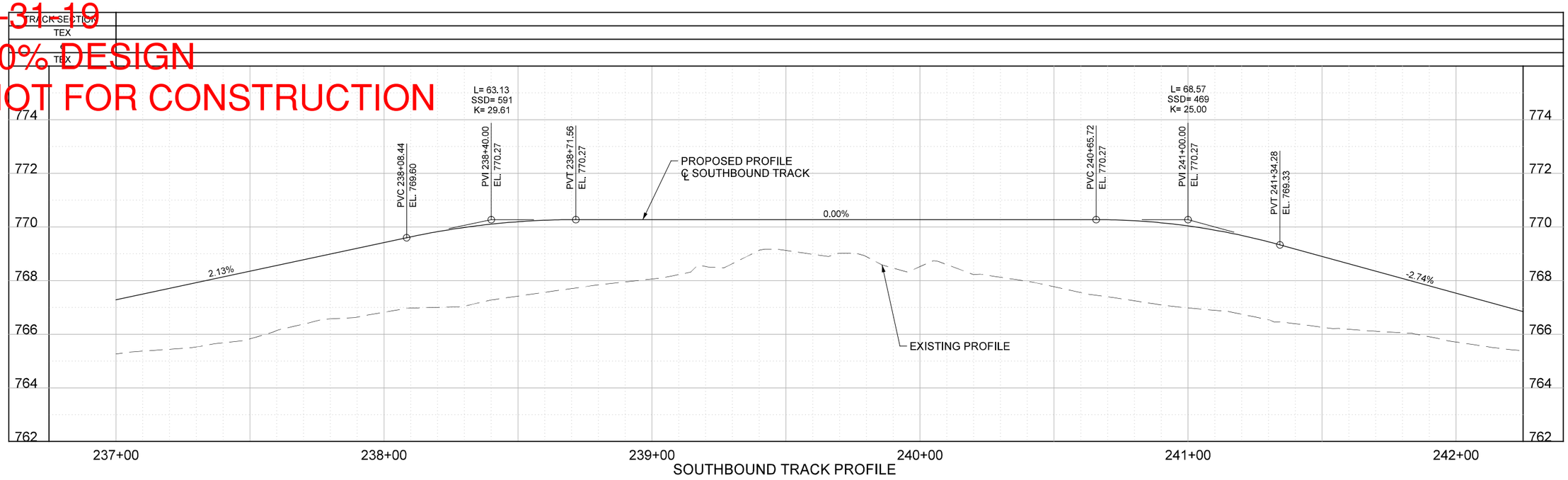

SOUTHBOUND TRACK PROFILE

TRACK SECTION
TEX
e
TEX

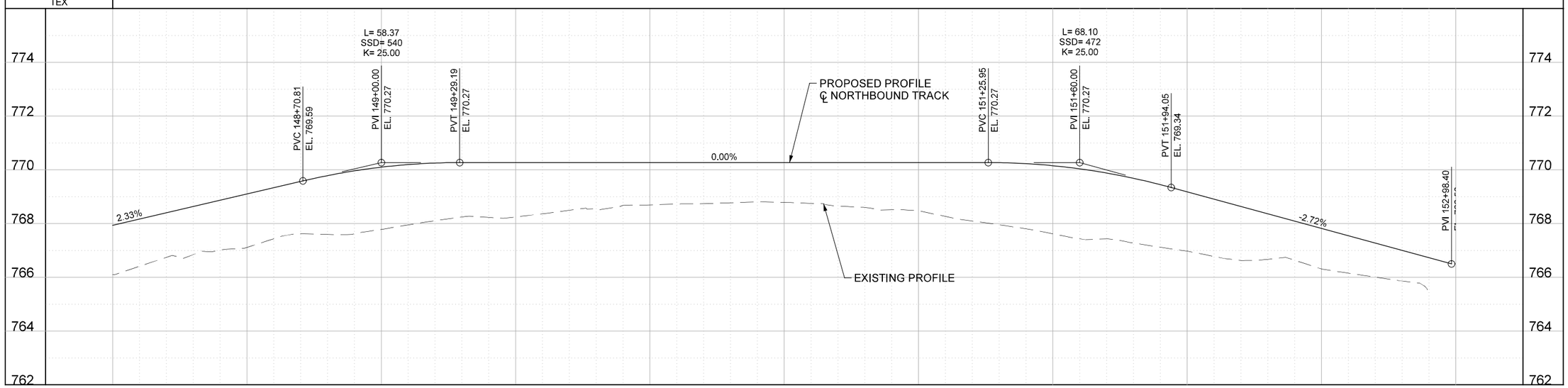

NORTHBOUND TRACK PROFILE

REV	DATE	DESCRIPTION

PLOT DATE: 1/30/2019 4:34:48 PM

DESIGNED BY	BMV
CHECKED BY	DHT
DRAWN BY	AR
CHECKED BY	BMV
APPROVED BY	DHT
DATE	

RideKC STREETCAR

30% DESIGN DATE: 01-31-2019

BURNS McDONNELL
9400 Ward Parkway
Kansas City, MO 64114
(816) 333-9400

NOT FOR CONSTRUCTION

RIVERFRONT STREETCAR EXTENSION

NORTHBOUND AND SOUTHBOUND TRACK
PROFILE
GRAND BOULEVARD
NB STA. 148+00 TO 153+00

SCALE FOR 22"x34":	H: 1"=20' V: 1"=2'
FILENAME:	C-PRO-1008.dgn
CONTRACT NO.:	XXXXXXXXX
CERTIFICATE OF AUTHORITY:	XXXXXXXXXX
DRAWING NO.:	C-PRO-1008
SHEET NO.:	32

1-31-19
30% DESIGN
NOT FOR CONSTRUCTION

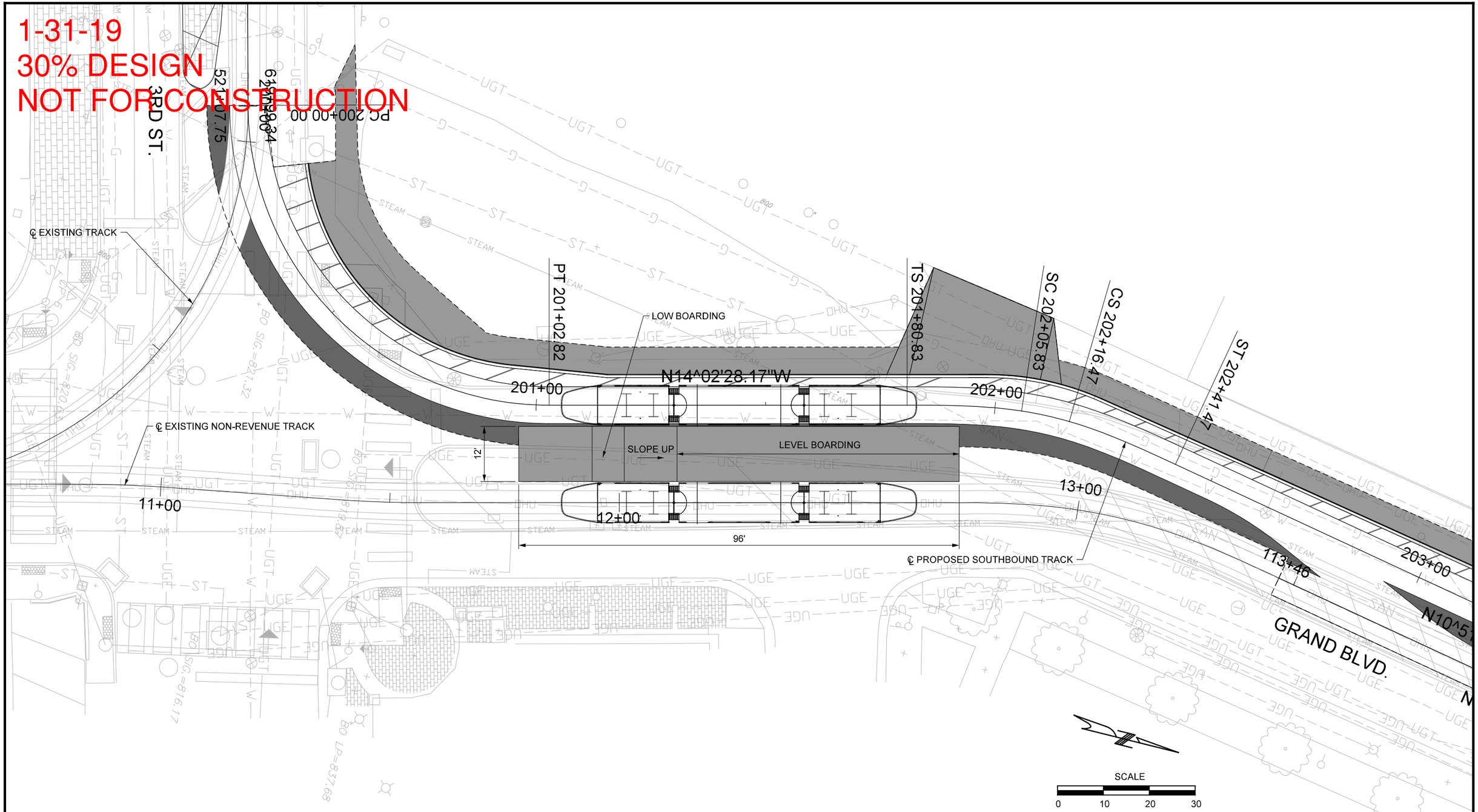

REV	DATE	DESCRIPTION

PLOT DATE: 1/30/2019 4:35:01 PM

DESIGNED BY	BMV
CHECKED BY	DHT
DRAWN BY	AR
CHECKED BY	BMV
APPROVED BY	DHT
DATE	

RideKC STREETCAR

30% DESIGN DATE: 01-31-2019

BURNS McDONNELL
9400 Ward Parkway
Kansas City, MO 64114
(816) 333-9400

NOT FOR CONSTRUCTION

RIVERFRONT STREETCAR EXTENSION

STATION STOP
PLAN
3RD STREET & GRAND BOULEVARD

SCALE FOR 22"x34":	1"=10'
FILENAME:	C-STAT-1001.dgn
CONTRACT NO.:	XXXXXXXXX
CERTIFICATE OF AUTHORITY:	XXXXXXXXXX
DRAWING NO.:	C-STAT-1001
SHEET NO.:	33

1-31-19
30% DESIGN
NOT FOR CONSTRUCTION

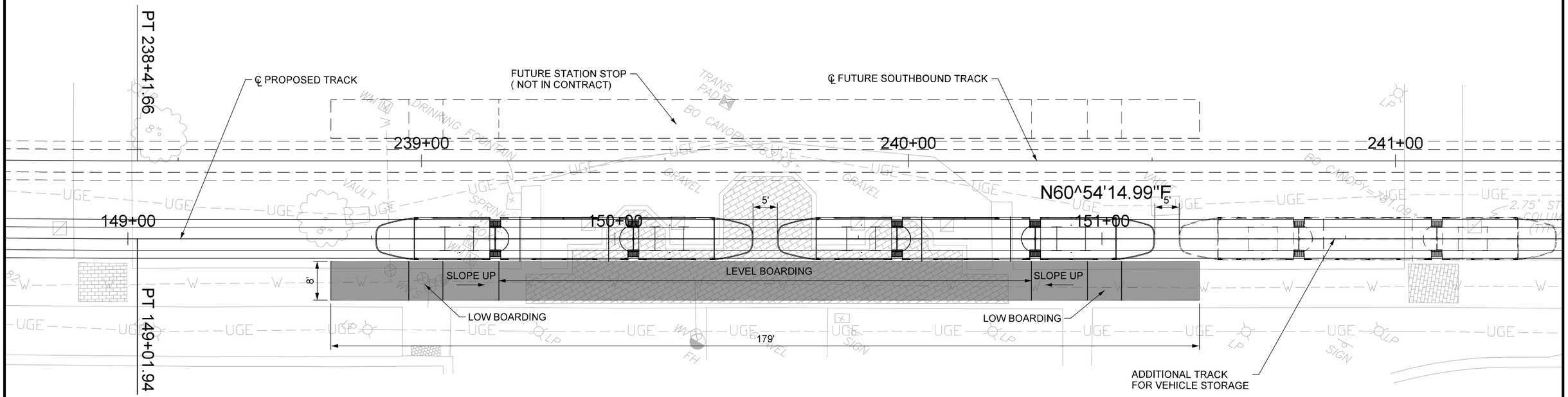

SCALE
0 10 20 30

REV	DATE	DESCRIPTION

PLOT DATE: 1/30/2019 4:35:08 PM

DESIGNED BY	BMV
CHECKED BY	DHT
DRAWN BY	AR
CHECKED BY	BMV
APPROVED BY	DHT
DATE	

RideKC STREETCAR

30% DESIGN DATE: 01-31-2019

BURNS McDONNELL
9400 Ward Parkway
Kansas City, MO 64114
(816) 333-9400

NOT FOR CONSTRUCTION

RIVERFRONT STREETCAR EXTENSION
NORTHBOUND AND SOUTHBOUND TRACK
PLAN
BERKLEY RIVERFRONT STATION STOP

SCALE FOR 22"x34":	1"=10'
FILENAME:	C-STAT-1002.dgn
CONTRACT NO.:	XXXXXXXXX
CERTIFICATE OF AUTHORITY:	XXXXXXXXXX
DRAWING NO.:	C-STAT-1002
SHEET NO.:	34

1-31-19
30% DESIGN
NOT FOR CONSTRUCTION

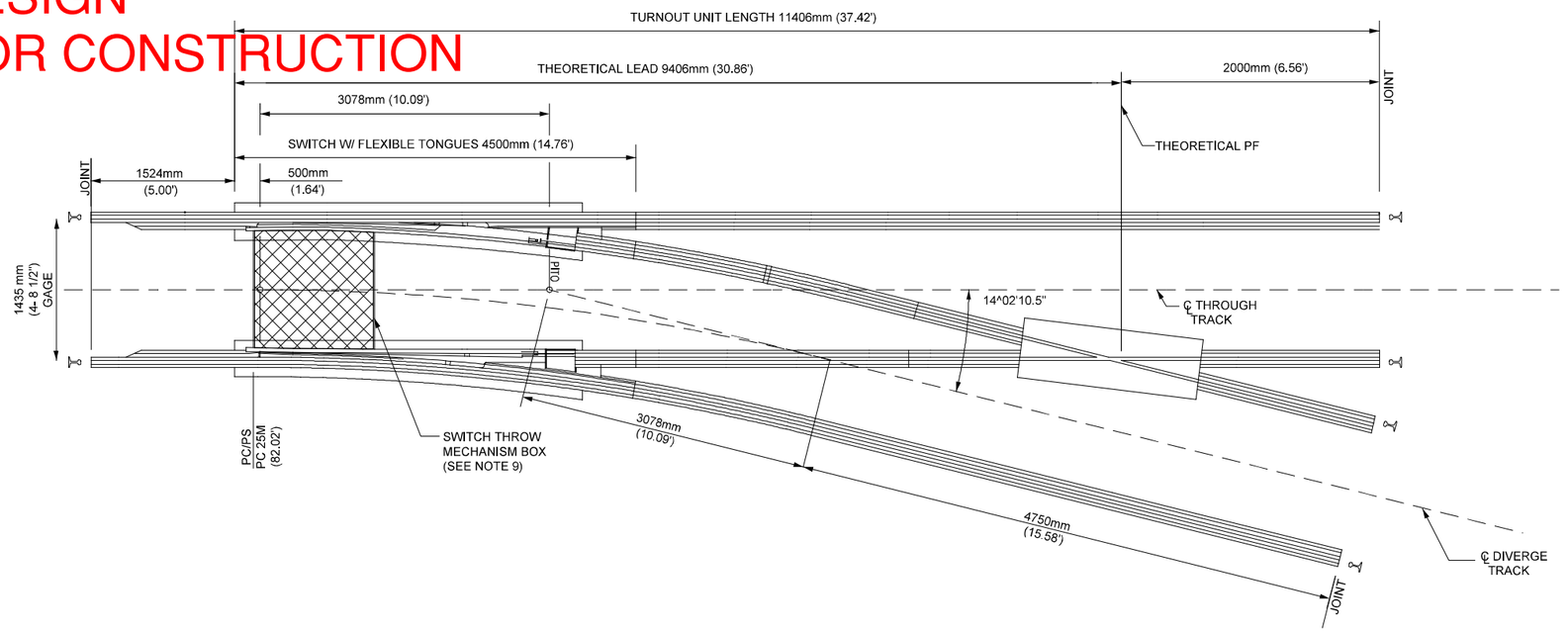

25 METER (82.02') TURNOUT (STRAIGHT FROG - RIGHT HAND SHOWN)
NTS

NOTES:

1. THIS DRAWING PROVIDES THE BASIS OF DESIGN FOR BIDDING PURPOSES ONLY. FINAL TURNOUT DESIGN SHALL BE ACCORDING TO SHOP DRAWINGS SUBMITTED BY SUPPLIER AND REVIEWED BY THE ENGINEER.
2. THE SWITCH CONSISTS OF DOUBLE TONGUE FLEXIBLE SWITCH POINTS WITH KEY FASTENED HEELS TO BE INSTALLED IN PAVED TURNOUT CONSTRUCTION.
3. THE RAIL AND COMPONENTS SHALL CONFORM TO 115RE RAIL.
4. SWITCH MACHINES WILL BE EITHER POWER, MANUAL, OR SPRING TYPES. SEE TRACK CHARTS FOR LOCATIONS. POWER AND MANUAL SWITCHES SHALL INCLUDE A SWITCH INDICATOR. SPRING SWITCHES MUST BE TRAILABLE WITH A SPRING AND RETURN MECHANISM (OR OTHER APPROVED MECHANISM).
5. ALL NOTED JOINTS ARE TO BE FIELD WELDED.
6. ALL DIMENSIONS ARE IN MILLIMETERS (FEET).
7. ACTUAL LENGTHS MAY VARY PER TURNOUT SUPPLIER. SEE SHOP DRAWINGS.
8. INSTALL DRAINS FROM SWITCH THROW MECHANISM BOX AND SWITCH HEATER BOX TO STORM SEWER AS SHOWN ON "SS" SERIES DRAWINGS.
9. MANUAL SWITCH MACHINE SHALL BE _____ OR APPROVED EQUAL. POWER SWITCH MACHINE SHALL BE _____ OR APPROVED EQUAL.
10. LEFT HAND TURNOUT SHALL BE OPPOSITE TO THAT SHOWN.

REV	DATE	DESCRIPTION

PLOT DATE: 1/30/2019 4:35:12 PM

DESIGNED BY	BMV
CHECKED BY	DHT
DRAWN BY	AR
CHECKED BY	BMV
APPROVED BY	DHT
DATE	

RideKC STREETCAR

30% DESIGN DATE: 01-31-2019

BURNS McDONNELL
9400 Ward Parkway
Kansas City, MO 64114
(816) 333-9400

NOT FOR CONSTRUCTION

RIVERFRONT STREETCAR EXTENSION

TURNOUT DETAIL
TRACKWORK DETAILS
25 METER (82.02') STRAIGHT FROG

SCALE FOR 22"x34":	NTS
FILENAME:	K-TD-1002.dgn
CONTRACT NO.:	XXXXXXXXX
CERTIFICATE OF AUTHORITY:	XXXXXXXXXX
DRAWING NO.:	K-TD-1002
SHEET NO.:	35

1-31-19
30% DESIGN
NOT FOR CONSTRUCTION

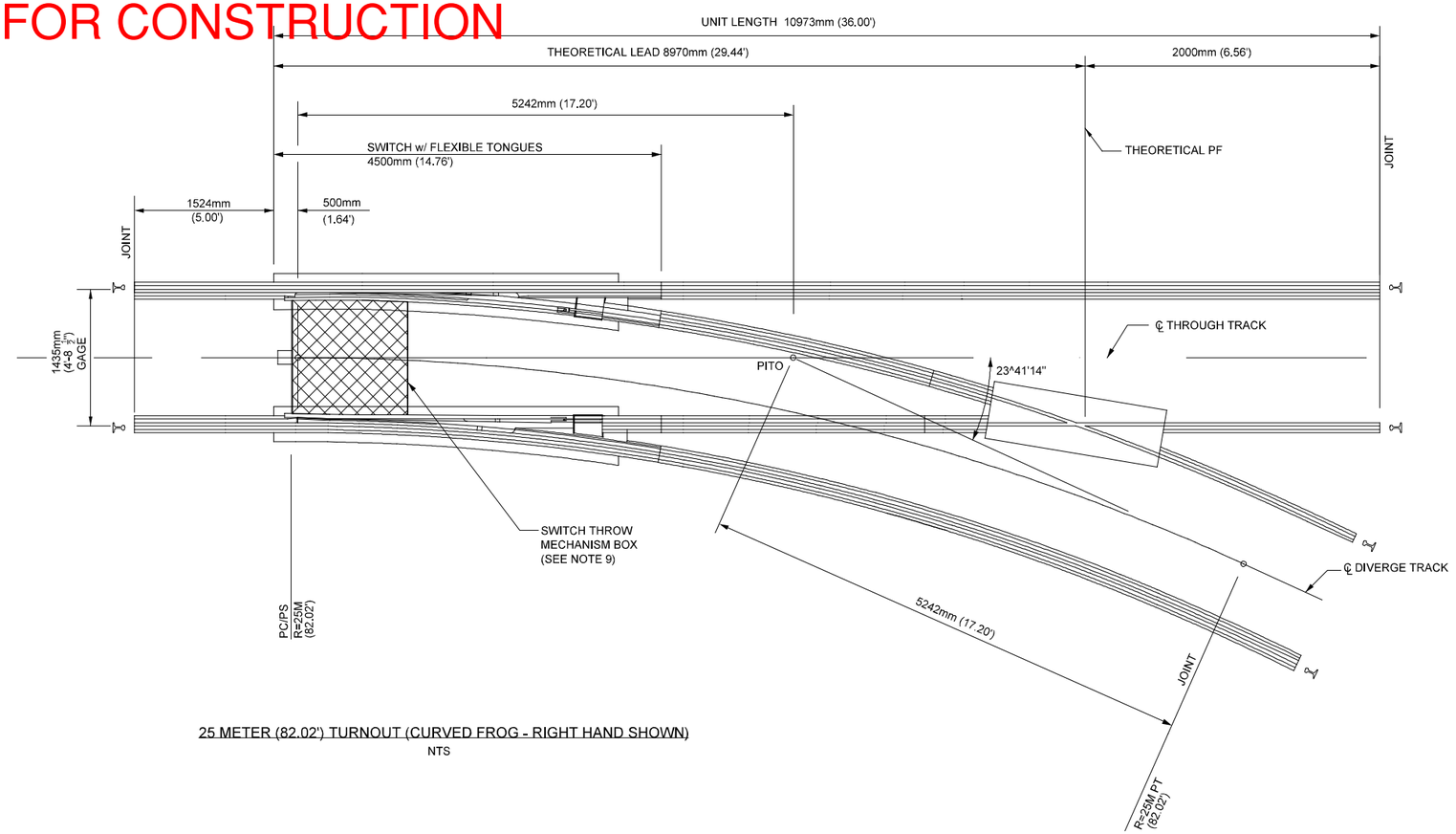

25 METER (82.02') TURNOUT (CURVED FROG - RIGHT HAND SHOWN)
NTS

NOTES:

1. THIS DRAWING PROVIDES THE BASIS OF DESIGN FOR BIDDING PURPOSES ONLY. FINAL TURNOUT DESIGN SHALL BE ACCORDING TO SHOP DRAWINGS SUBMITTED BY SUPPLIER AND REVIEWED BY THE ENGINEER.
2. THE SWITCH CONSISTS OF DOUBLE TONGUE FLEXIBLE SWITCH POINTS WITH KEY FASTENED HEELS TO BE INSTALLED IN PAVED TURNOUT CONSTRUCTION.
3. THE RAIL AND COMPONENTS SHALL CONFORM TO 115RE RAIL.
4. SWITCH MACHINES WILL BE EITHER POWER, MANUAL, OR SPRING TYPES. SEE TRACK CHARTS FOR LOCATIONS. POWER AND MANUAL SWITCHES SHALL INCLUDE A SWITCH INDICATOR. SPRING SWITCHES MUST BE TRAILABLE WITH A SPRING AND RETURN MECHANISM (OR OTHER APPROVED MECHANISM).
5. ALL NOTED JOINTS ARE TO BE FIELD WELDED.
6. ALL DIMENSIONS ARE IN MILLIMETERS (FEET).
7. ACTUAL LENGTHS MAY VARY PER TURNOUT SUPPLIER. SEE SHOP DRAWINGS.
8. INSTALL DRAINS FROM SWITCH THROW MECHANISM BOX AND SWITCH HEATER BOX TO STORM SEWER AS SHOWN ON "SS" SERIES DRAWINGS
9. MANUAL SWITCH MACHINE SHALL BE _____ __ OR APPROVED EQUAL. POWER SWITCH MACHINE SHALL BE _____ OR APPROVED EQUAL.
10. LEFT HAND TURNOUT SHALL BE OPPOSITE TO THAT SHOWN.

REV	DATE	DESCRIPTION

PLOT DATE: 1/30/2019 4:35:15 PM

DESIGNED BY	BMV
CHECKED BY	DHT
DRAWN BY	AR
CHECKED BY	BMV
APPROVED BY	DHT
DATE	

RideKC STREETCAR

30% DESIGN DATE: 01-31-2019

BURNS McDONNELL
9400 Ward Parkway
Kansas City, MO 64114
(816) 333-9400

NOT FOR CONSTRUCTION

RIVERFRONT STREETCAR EXTENSION

TURNOUT DETAIL
TRACKWORK DETAILS
25 METER (82.02') CURVED FROG

SCALE FOR 22"x34":	NTS
FILENAME:	K-TD-1013.dgn
CONTRACT NO.:	XXXXXXXXX
CERTIFICATE OF AUTHORITY:	XXXXXXXXXX
DRAWING NO.:	K-TD-1013
SHEET NO.:	36

1-31-19
30% DESIGN
NOT FOR CONSTRUCTION

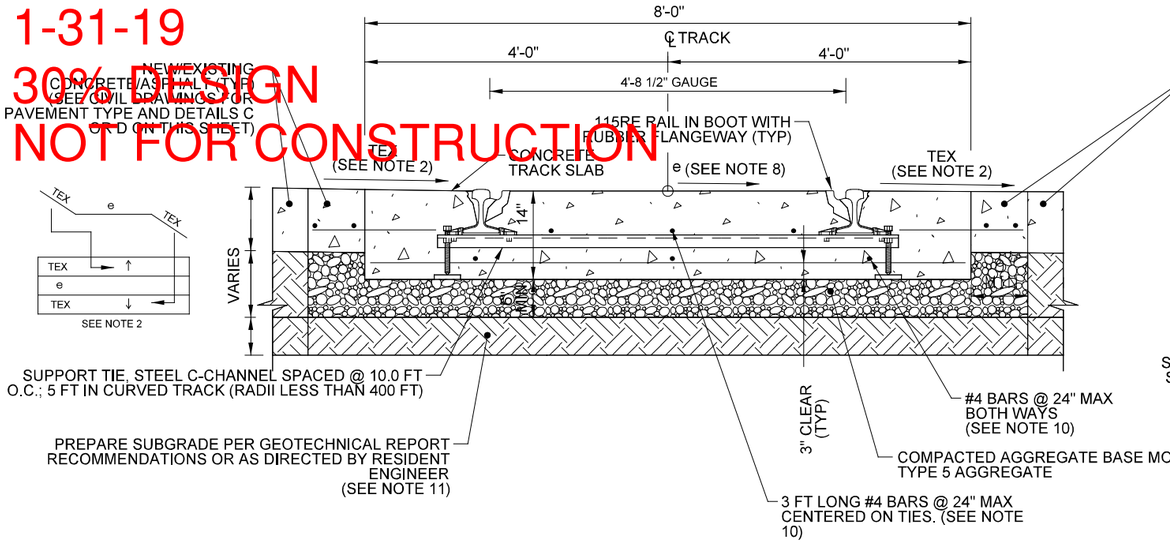

115 RE
TRACK SLAB DETAIL — A
NOT TO SCALE

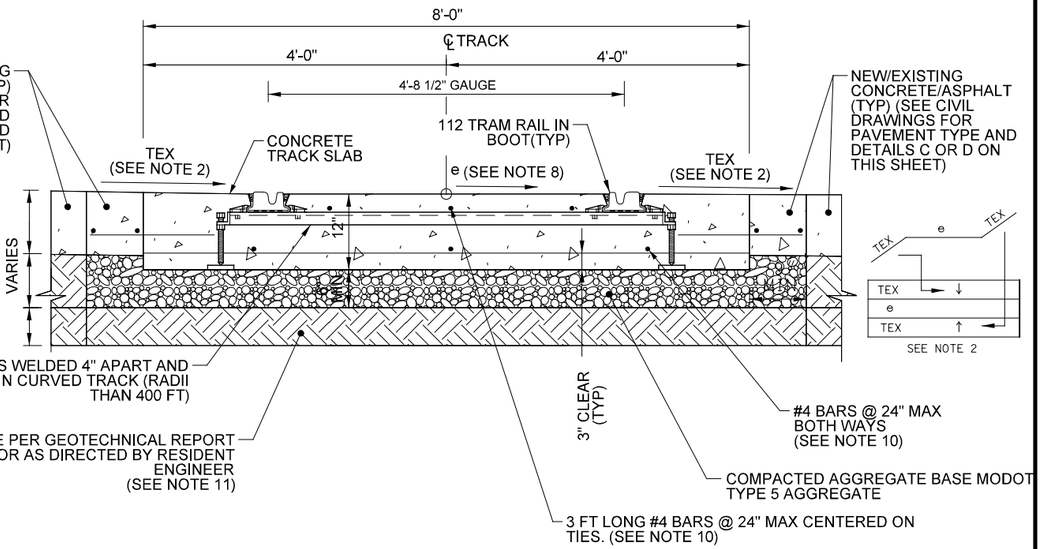

112 TRAM
TRACK SLAB DETAIL — B
NOT TO SCALE

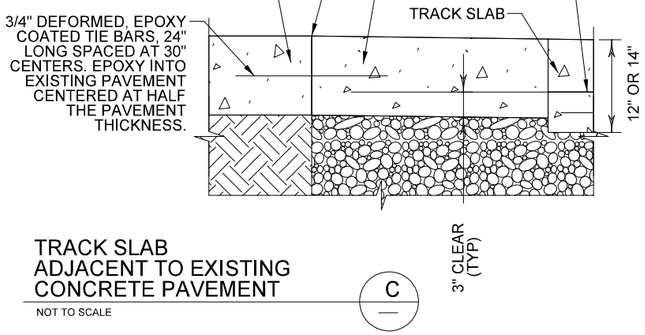

TRACK SLAB
ADJACENT TO EXISTING
CONCRETE PAVEMENT — C
NOT TO SCALE

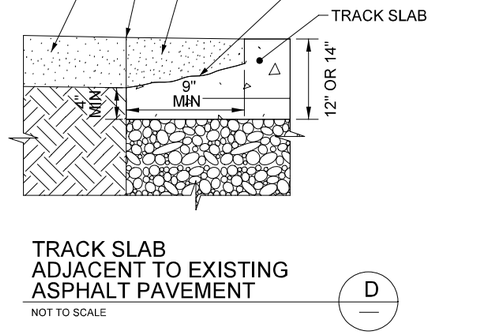

TRACK SLAB
ADJACENT TO EXISTING
ASPHALT PAVEMENT — D
NOT TO SCALE

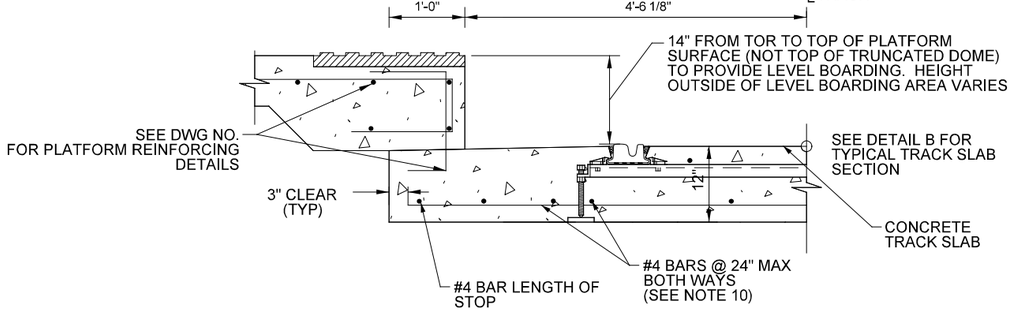

TRACK SLAB
ADJACENT TO
STREETCAR STOP — E
NOT TO SCALE

NOTES:

1. TRACK EDGE CROSS-SLOPE (TEX) ARE SHOWN ON C-PRO-1000 SERIES DRAWINGS AND SHALL BE FIELD ADJUSTED TO MINIMIZE ROADWAY REGRADING. COORDINATE WITH ENGINEER FOR APPROVAL. CROSS-SLOPES ADJACENT TO TRAVEL LANES NOT TO EXCEED 5%, UNLESS ADJACENT TO PARKING LANE OR CURB, WITHOUT APPROVAL OF ENGINEER.
2. CONTRACTOR TO SUBMIT TRACK APPURTENANCES (GAUGE TIE, BOOT, FASTENERS, ETC.) FOR REVIEW AND APPROVAL BY ENGINEER PRIOR TO FABRICATION.
3. ALL TRACK SHALL HAVE ZERO CANT UNLESS OTHERWISE SPECIFIED.
4. REFER TO PROJECT GEOTECHNICAL REPORT FOR ENGINEERING RECOMMENDATIONS REGARDING UNSUITABLE MATERIAL. SUBMIT OVER EXCAVATION BACKFILL MATERIAL FOR REVIEW AND APPROVAL BY ENGINEER.
5. RESTRAINING RAIL REQUIRED FOR ALL HORIZONTAL CURVES WITH A RADIUS LESS THAN 400' FOR 115 RE TRACK. SEE SHEET 42 FOR DETAILS.
6. SEE SYSTEM WIDE ELECTRICAL PLANS (VOLUME X) FOR THE REQUIRED SYSTEM ELEMENTS INCLUDING DUCT BANKS, INSULATED JOINTS, CROSS BONDING, NEGATIVE RETURN, AND OTHER SYSTEM APPURTENANCES THAT INTERFACE WITH TRACK/CIVIL WORK.
7. "e" IS THE CROSS SLOPE BETWEEN THE RAILS. 0% (TYP)18SEE 32 TO DRAWINGS FOR "e" VALUE
8. EXISTING TROLLEY TRACK SLAB TO REMAIN UNLESS AFFECTED BY CONSTRUCTION OF PROPOSED TRACK SLAB OR DIRECTED BY ENGINEER TO BE REMOVED.
9. SUBGRADE REQUIRED TO MEET COMPACTION REQUIREMENTS OUTLINED IN THE GEOTECHNICAL REPORT.
10. WHERE ADJACENT TO CONCRETE PAVEMENT CONTRACTOR MAY POUR ROADWAY PAVEMENT MONOLITHICALLY WITH TRACK SLAB.

REV	DATE	DESCRIPTION

PLOT DATE: 1/30/2019 4:35:19 PM

DESIGNED BY	BMV
CHECKED BY	DHT
DRAWN BY	AR
CHECKED BY	BMV
APPROVED BY	DHT
DATE	

RideKC STREETCAR

30% DESIGN DATE: 01-31-2019

BURNS McDONNELL
9400 Ward Parkway
Kansas City, MO 64114
(816) 333-9400

NOT FOR CONSTRUCTION

RIVERFRONT STREETCAR EXTENSION

TRACK SLAB DETAILS

SCALE FOR 22"x34":	NTS
FILENAME:	K-TD-1003.dgn
CONTRACT NO.:	XXXXXXXXX
CERTIFICATE OF AUTHORITY:	XXXXXXXXXX
DRAWING NO.:	K-TD-1003
SHEET NO.:	37

1-31-19
30% DESIGN
NOT FOR CONSTRUCTION

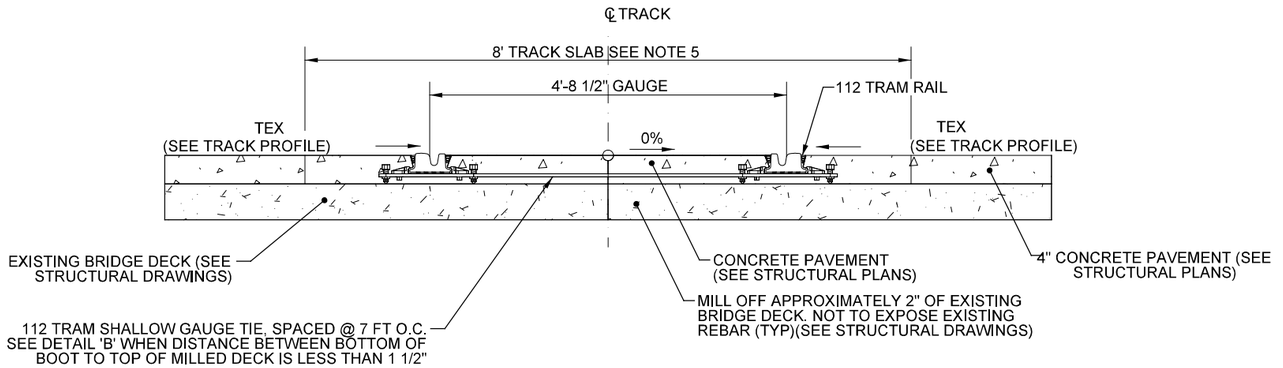

112 TRAM EMBEDDED TRACK ON GRAND BOULEVARD BRIDGE — A
NOT TO SCALE

NOTES:

1. DIMENSIONS AND MINIMUM CLEARANCES NOTED IN DETAIL ARE APPROXIMATE AND SHOULD BE UPDATED IN FINAL APPROVED SHOP DRAWINGS PRIOR TO INSTALLATION.
2. TRACK GAUGE IS MEASURED AT 5/8" BELOW TOP OF RAIL AND FROM THE GAUGE FACE TO GAUGE FACE
3. SHALLOW GAUGE TIE SHOULD BE RIGID ENOUGH TO MAINTAIN LINE, GRADE, AND GAUGE OF THE RAIL. GAUGE TIE SHALL BE NO GREATER THAN 1/2" THICK AND 3" WIDE. CONTRACTOR TO SUBMIT SHOP DRAWINGS FOR REVIEW BY ENGINEER.
4. CONTRACTOR TO SUBMIT INSTALLATION PLAN FOR HOLDING GAUGE IN ELASTOMERIC GROUT TROUGH TO ENGINEER FOR REVIEW AND APPROVAL.
5. TRACK SLAB LIMITS ON STRUCTURE SHOWN FOR PAY LIMITS. CONTRACTOR MAY POUR BRIDGE PAVEMENT MONOLITHICALLY WITH TRACK SLAB.

REV	DATE	DESCRIPTION

PLOT DATE: 1/30/2019 4:35:24 PM

DESIGNED BY	BMV
CHECKED BY	DHT
DRAWN BY	AR
CHECKED BY	BMV
APPROVED BY	DHT
DATE	

RideKC STREETCAR

30% DESIGN DATE: 01-31-2019

BURNS McDONNELL
9400 Ward Parkway
Kansas City, MO 64114
(816) 333-9400

NOT FOR CONSTRUCTION

RIVERFRONT STREETCAR EXTENSION

TRACK DETAILS ON STRUCTURE

SCALE FOR 22"x34":	NTS
FILENAME:	K-TD-1008.dgn
CONTRACT NO.:	XXXXXXXXX
CERTIFICATE OF AUTHORITY:	XXXXXXXXX
DRAWING NO.:	K-TD-1008
SHEET NO.:	38

1-31-19
30% DESIGN
NOT FOR CONSTRUCTION

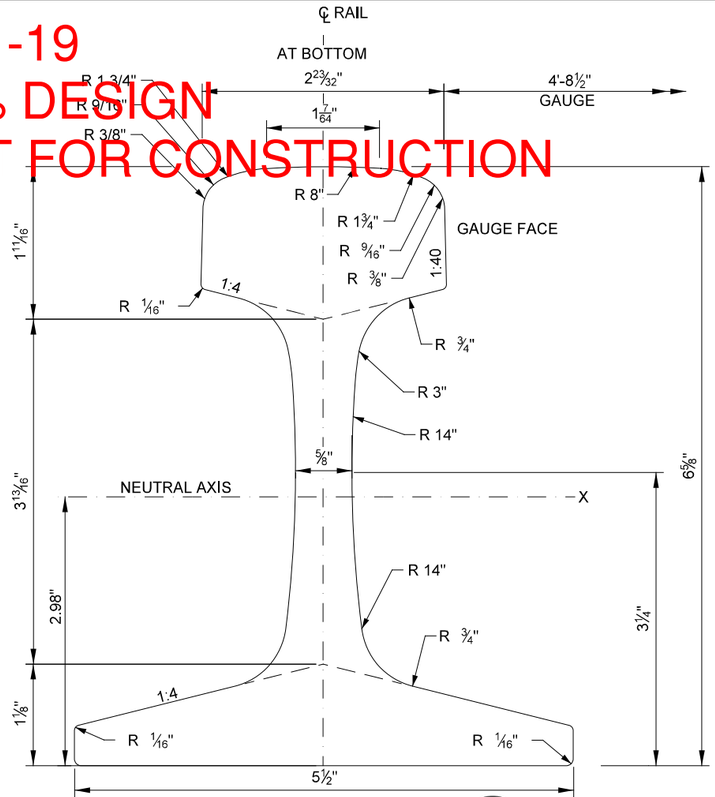

115 RE RAIL SECTION — A
NOT TO SCALE

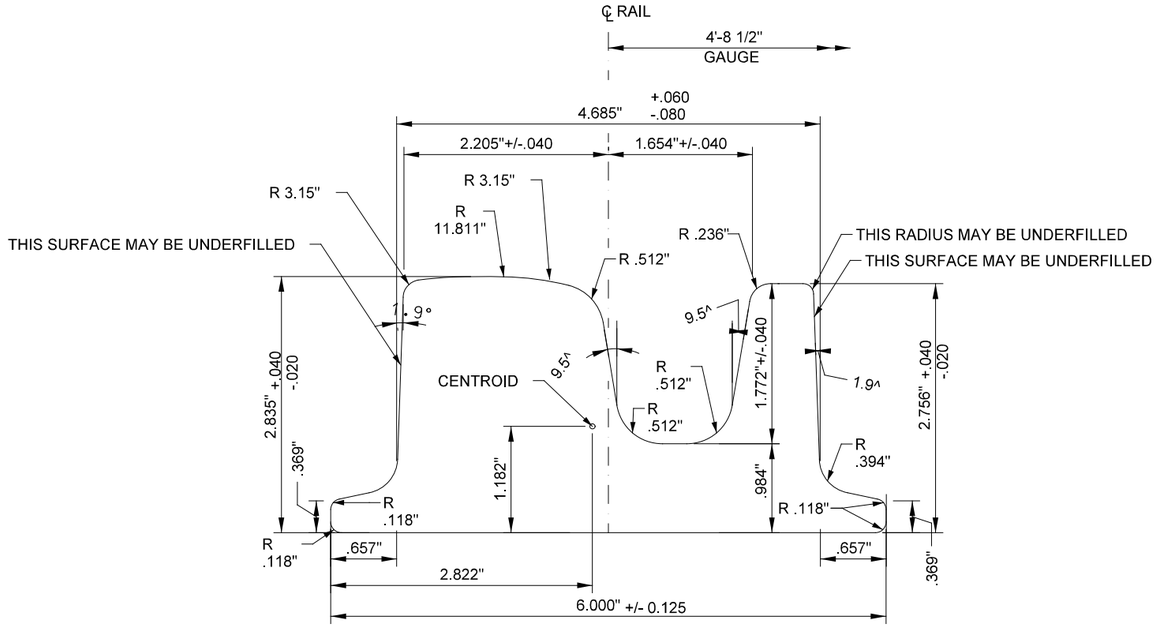

112 TRAM RAIL SECTION — B
NOT TO SCALE

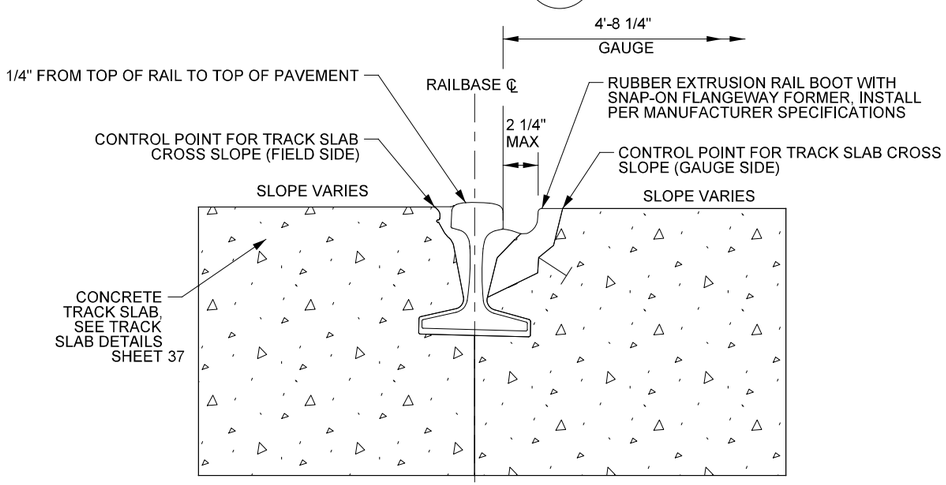

115 RE RAIL WITH FLANGEWAY FORMER — C
NOT TO SCALE

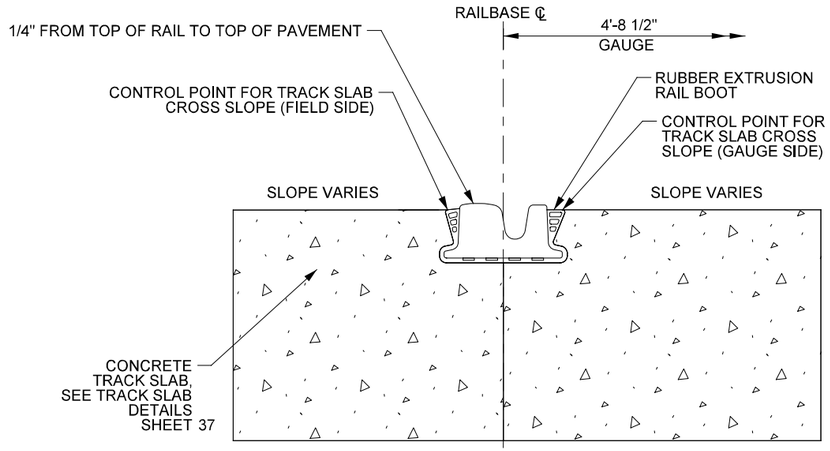

112 TRAM RAIL WITH BOOT — D
NOT TO SCALE

REV	DATE	DESCRIPTION

PLOT DATE: 1/30/2019 4:35:28 PM

DESIGNED BY	BMV
CHECKED BY	DHT
DRAWN BY	AR
CHECKED BY	BMV
APPROVED BY	DHT
DATE	

RideKC STREETCAR

30% DESIGN DATE: 01-31-2019

BURNS McDONNELL
9400 Ward Parkway
Kansas City, MO 64114
(816) 333-9400

NOT FOR CONSTRUCTION

RIVERFRONT STREETCAR EXTENSION

115 RE AND 112 TRAM
RAIL SECTIONS

SCALE FOR 22"x34":	NTS
FILENAME:	K-TD-1004.dgn
CONTRACT NO.:	XXXXXXXXX
CERTIFICATE OF AUTHORITY:	XXXXXXXXXX
DRAWING NO.:	K-TD-1004
SHEET NO.:	39

1-31-19
30% DESIGN
NOT FOR CONSTRUCTION

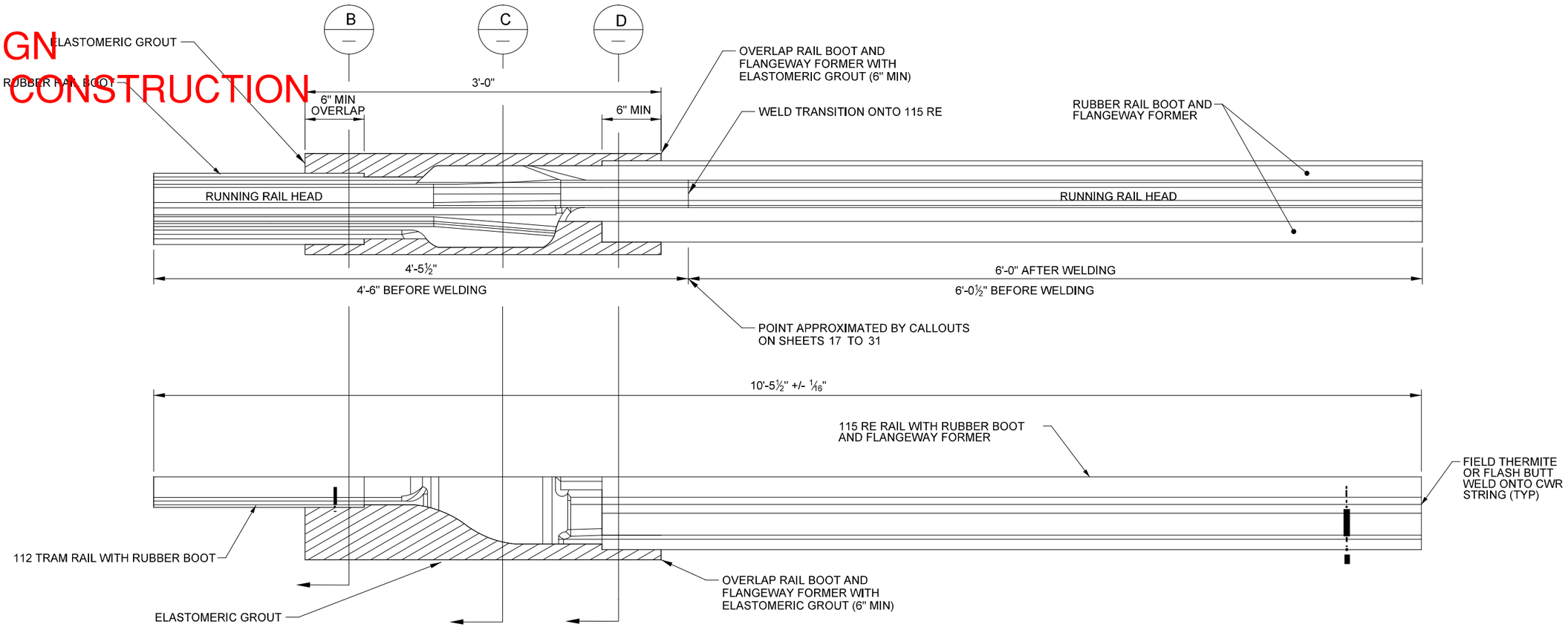

TRANSITION RAIL
PLAN AND ELEVATION — A
NOT TO SCALE

NOTES:

1. CONTRACTOR TO SUBMIT SHOP DRAWINGS FOR REVIEW AND APPROVAL BY ENGINEER PRIOR TO MANUFACTURING TRANSITION RAIL.
2. A MINIMUM OF 7" CONCRETE DEPTH BELOW ELASTOMERIC GROUT REQUIRED.
3. CONTRACTOR TO FOLLOW ELASTOMERIC GROUT MANUFACTURER'S RECOMMENDATION FOR INSTALLATION.

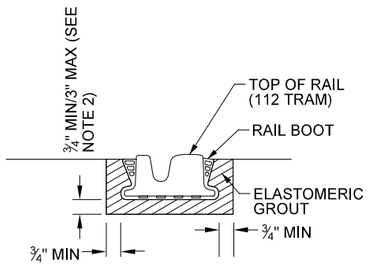

SECTION — B
NOT TO SCALE

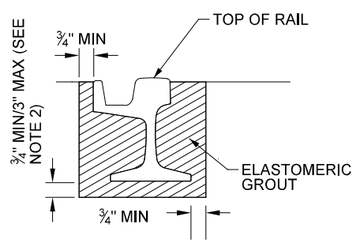

SECTION — C
NOT TO SCALE

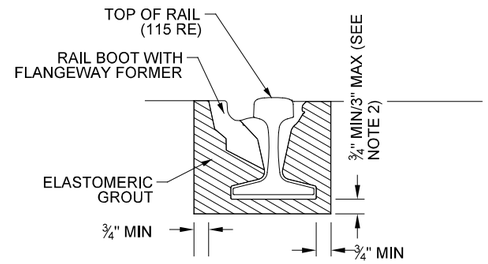

SECTION — D
NOT TO SCALE

REV	DATE	DESCRIPTION

PLOT DATE: 1/30/2019 4:35:31 PM

DESIGNED BY	BMV
CHECKED BY	DHT
DRAWN BY	AR
CHECKED BY	BMV
APPROVED BY	DHT
DATE	

RideKC STREETCAR

30% DESIGN DATE: 01-31-2019

BURNS McDONNELL
9400 Ward Parkway
Kansas City, MO 64114
(816) 333-9400

NOT FOR CONSTRUCTION

RIVERFRONT STREETCAR EXTENSION

TRANSITION RAIL

SCALE FOR 22"x34":	NTS
FILENAME:	K-TD-1005.dgn
CONTRACT NO.:	XXXXXXXXX
CERTIFICATE OF AUTHORITY:	XXXXXXXXX
DRAWING NO.:	K-TD-1005
SHEET NO.:	40

1-31-19
30% DESIGN
NOT FOR CONSTRUCTION

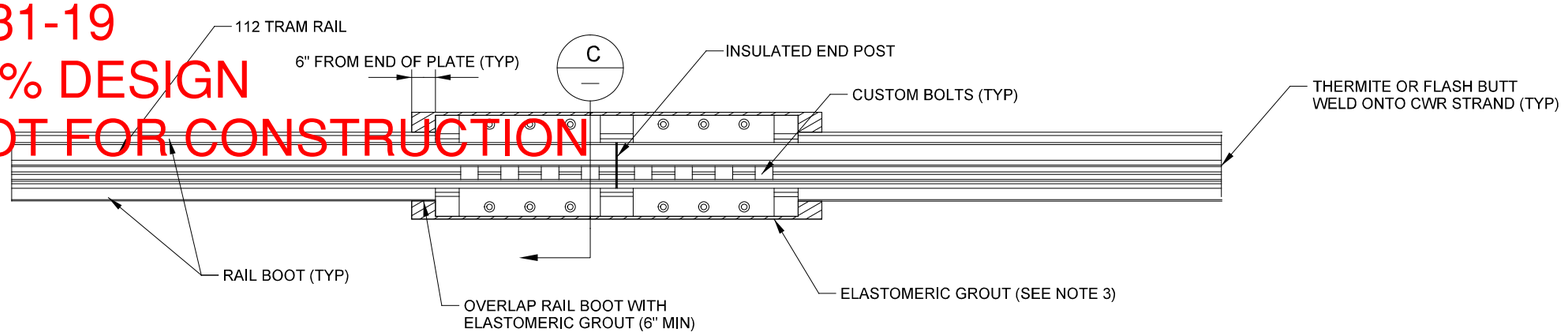

INSULATED JOINT FOR 112 TRAM RAIL
PLAN VIEW
NOT TO SCALE
A

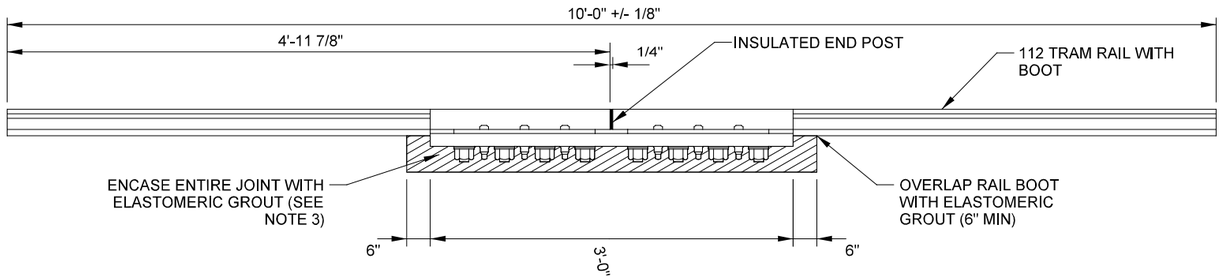

INSULATED JOINT FOR 112 TRAM RAIL
ELEVATION VIEW
NOT TO SCALE
B

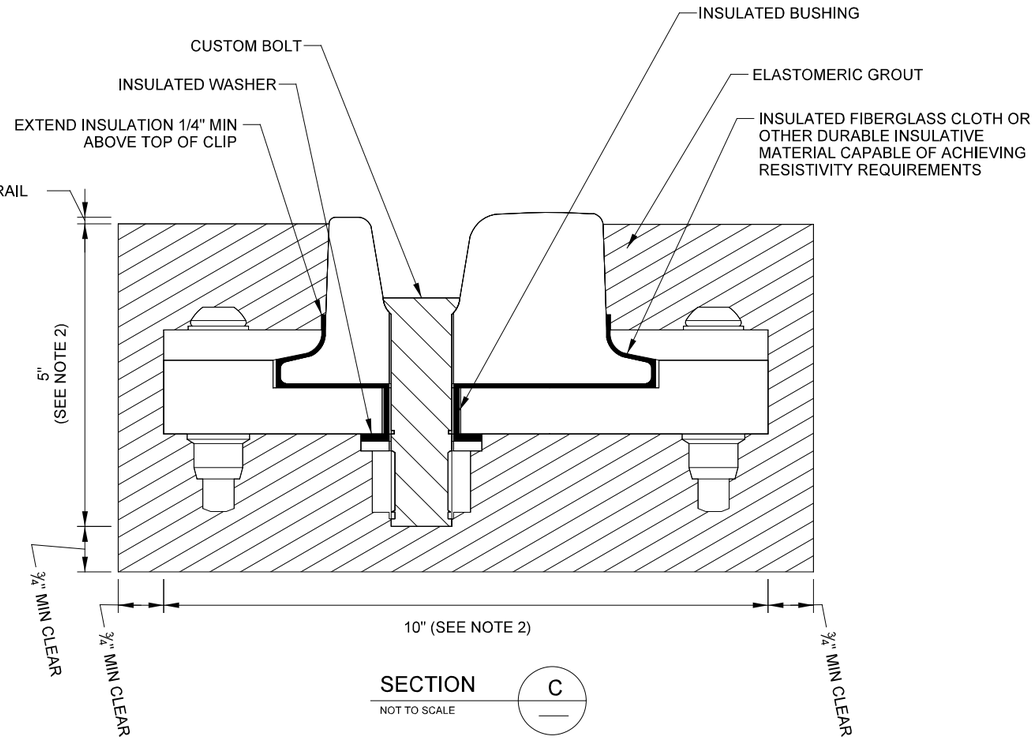

SECTION
NOT TO SCALE
C

NOTES:

1. CONTRACTOR TO VERIFY RESISTIVITY AND PERFORMANCE OF INSULATED JOINT AND SUBMIT SHOP DRAWINGS FOR REVIEW AND APPROVAL BY ENGINEER PRIOR TO INSTALLATION. SEE SPECIFICATIONS FOR RESISTIVITY REQUIREMENTS. SUGGEST TESTING RESISTIVITY AT FACTORY AND PRIOR TO EMBEDDING IN CONCRETE
2. DIMENSIONS AND MINIMUM CLEARANCES NOTED IN DETAIL ARE APPROXIMATE AND SHOULD BE UPDATED IN FINAL APPROVED SHOP DRAWINGS PRIOR TO INSTALLATION.
3. A MINIMUM OF 7" CONCRETE DEPTH REQUIRED BELOW ELASTOMERIC GROUT.
4. INSTALL ELASTOMERIC GROUT PER MANUFACTURER'S INSTALLATION INSTRUCTIONS.

REV	DATE	DESCRIPTION

PLOT DATE: 1/30/2019 4:35:35 PM

DESIGNED BY	BMV
CHECKED BY	DHT
DRAWN BY	AR
CHECKED BY	BMV
APPROVED BY	DHT
DATE	

RideKC STREETCAR

30% DESIGN DATE: 01-31-2019

BURNS McDONNELL
9400 Ward Parkway
Kansas City, MO 64114
(816) 333-9400

NOT FOR CONSTRUCTION

RIVERFRONT STREETCAR EXTENSION

INSULATED JOINT
112 TRAM RAIL

SCALE FOR 22"x34":	NTS
FILENAME:	K-TD-1006.dgn
CONTRACT NO.:	XXXXXXXXX
CERTIFICATE OF AUTHORITY:	XXXXXXXXXX
DRAWING NO.:	K-TD-1006
SHEET NO.:	41

1-31-19
30% DESIGN
NOT FOR CONSTRUCTION

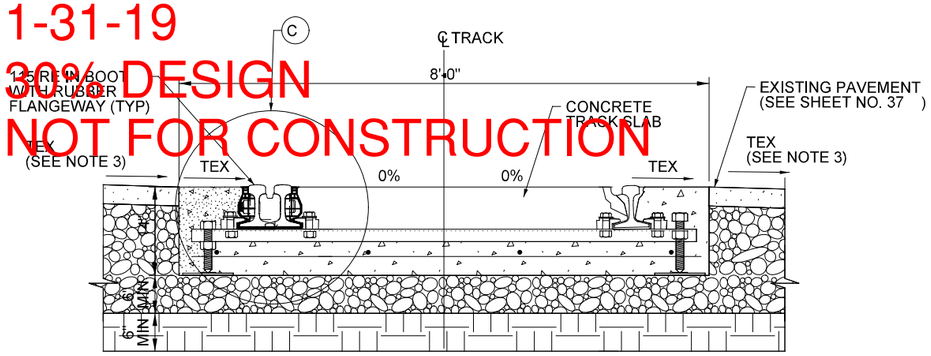

EMBEDDED TRACK WITH
RESTRAINING RAIL - CROSS SECTION — A
NOT TO SCALE

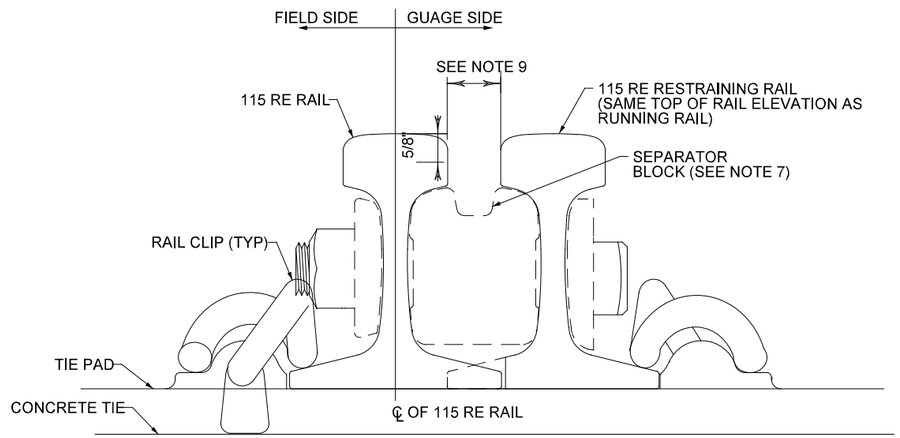

RESTRAINING RAIL - BALLASTED TRACK
ASSEMBLY AND FLANGEWAY DETAIL — B
NOT TO SCALE

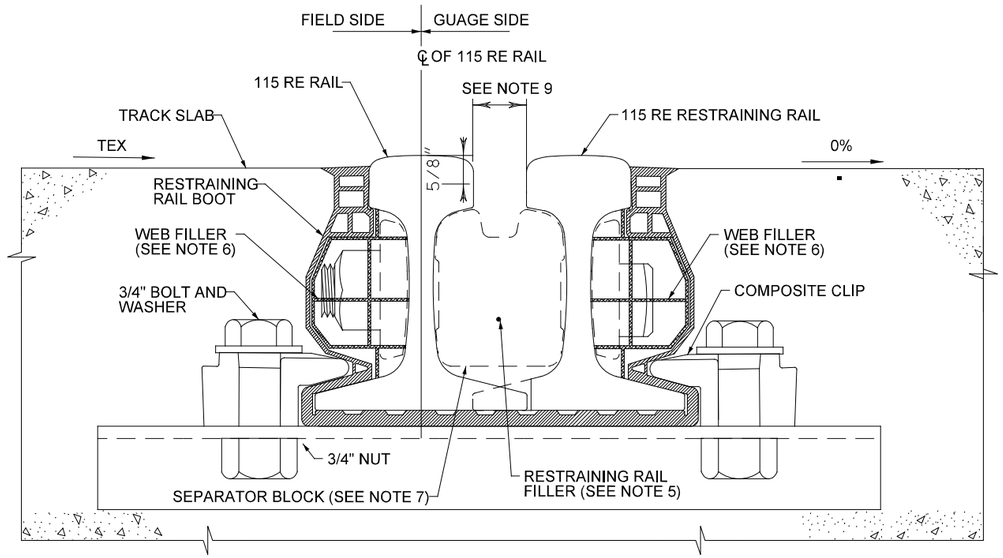

RESTRAINING RAIL BOOT/TIE - EMBEDDED TRACK
ASSEMBLY AND FLANGEWAY DETAIL — C
NOT TO SCALE

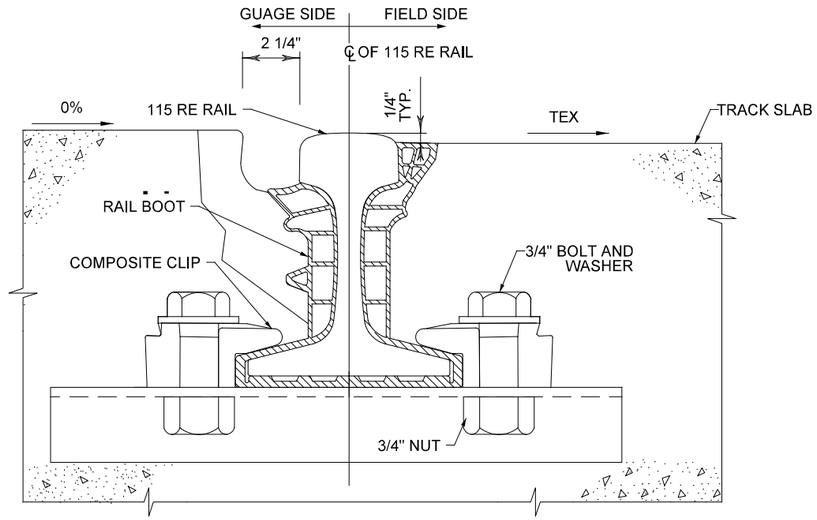

RAIL BOOT/TIE ASSEMBLY
AND FLANGEWAY DETAIL — D
NOT TO SCALE

NOTES:

1. PROPOSED PROFILE IS TOP OF LOW RAIL. NOTE THAT TOP OF CONCRETE BETWEEN RAILS IS 1/4" BELOW TOP OF RAIL.
2. AVOID DAMAGING THE RAIL BOOT DURING STORAGE AND INSTALLATION. REPAIR ALL PUNCTURES, RIPS, TEARS AND GOUGES IN ACCORDANCE WITH MANUFACTURER'S INSTRUCTIONS TO PREVENT STRAY CURRENT LEAKAGE.
3. CROSS SLOPE VARIES (UP OR DOWN), REFER TO SHEETS C-PRO-1000.
4. EMBEDDED RAIL MAY BE INSTALLED WITHOUT CANT UNLESS SPECIFICALLY SHOWN OTHERWISE.
5. BETWEEN SEPARATOR BLOCK ASSEMBLIES, SPACE BETWEEN RUNNING RAIL AND RESTRAINING RAIL SHALL BE FILLED WITH EITHER GUARD RAIL FILLER OR FLOWABLE FILL IN EMBEDDED TRACK ONLY, MAINTAINING A FLANGEWAY DEPTH OF 2 1/8" BELOW THE TOP OF RAIL.
6. WEB FILLER REQUIRED ALONG BOTH SIDES OF RAIL BOOT ASSEMBLY BETWEEN LOCATIONS OF SEPARATOR BLOCK HEAD BOLTS.
7. MAXIMUM SEPARATOR BLOCK SPACING 36" CENTER TO CENTER. SEPARATOR BLOCK MAY BE SOLID TYPE OR SPLIT TYPE.
8. END 36" OF RESTRAINING RAIL TO BE FLARED FROM X"(SEE NOTE 9) FLANGEWAY TO 3 1/2".
9. FINAL DIMENSION TO BE DETERMINED ONCE FINAL VEHICLE SELECTION AND WHEEL PROFILE ARE DETERMINED
10. FOR TRACK SLAB DETAILS SEE SHEET NO.37
11. RESTRAINING RAIL TO BE INSTALLED ON THE INSIDE RUNNING RAIL FOR CURVES WITH 115 RE RAIL AND A RADIUS UNDER 400' AND SHALL EXTEND 10' BEYOND THE LIMITS OF THE CURVE.
12. FOR REVENUE SERVICE TRACK USING 115 RE RAIL, USE RESTRAINING RAIL ON BOTH RAILS FOR RADII UNDER 100'.

REV	DATE	DESCRIPTION

PLOT DATE: 1/30/2019 4:35:39 PM

DESIGNED BY	BMV
CHECKED BY	DHT
DRAWN BY	AR
CHECKED BY	BMV
APPROVED BY	DHT
DATE	

RideKC STREETCAR

30% DESIGN DATE: 01-31-2019

BURNS McDONNELL
9400 Ward Parkway
Kansas City, MO 64114
(816) 333-9400

NOT FOR CONSTRUCTION

RIVERFRONT STREETCAR EXTENSION

RESTRAINING RAIL

SCALE FOR 22"x34":	NTS
FILENAME:	K-TD-1007.dgn
CONTRACT NO.:	XXXXXXXXX
CERTIFICATE OF AUTHORITY:	XXXXXXXXXX
DRAWING NO.:	K-TD-1007
SHEET NO.:	42

1-31-19
30% DESIGN
NOT FOR CONSTRUCTION

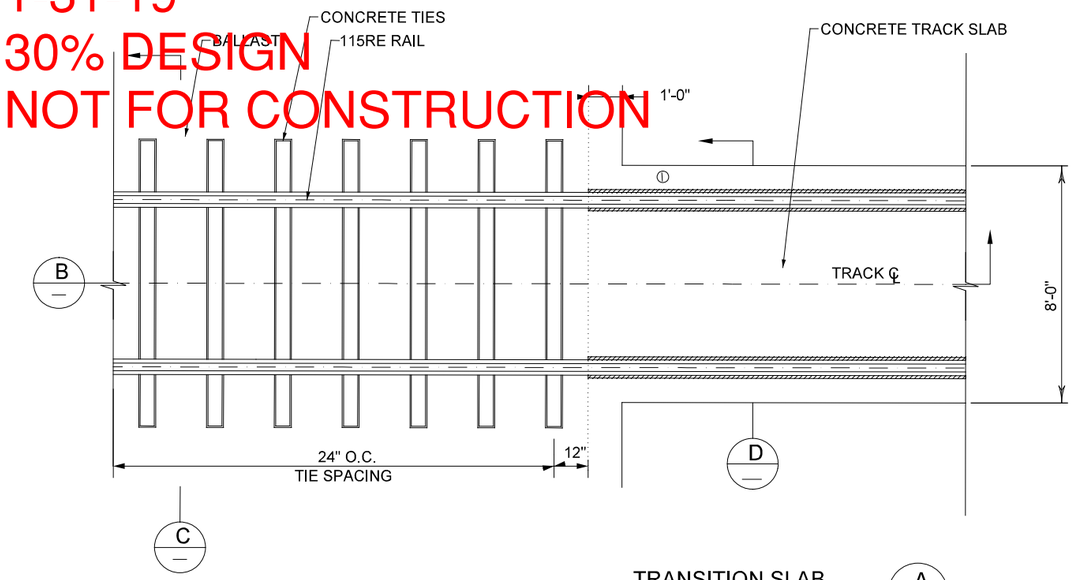

TRANSITION SLAB
NOT TO SCALE
A

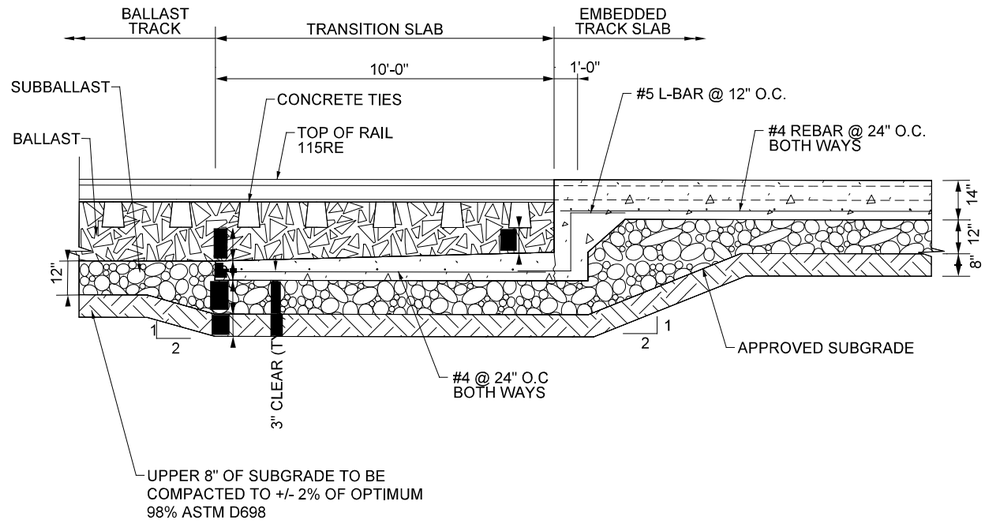

NOTES:

INCREASE BALLAST MASS HEIGHT AS NECESSARY TO MAINTAIN 2" MIN. EXPOSURE ABOVE EXISTING GROUND AND 4" MIN. EMBEDMENT BELOW BOTTOM OF BALLAST.

TRANSITION SLAB SECTION
NOT TO SCALE
B

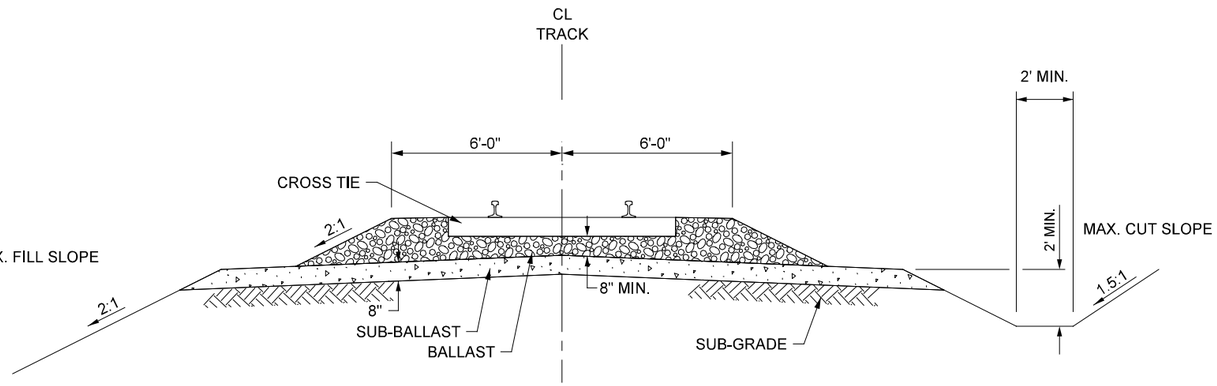

BALLASTED TRACK
NOT TO SCALE
C

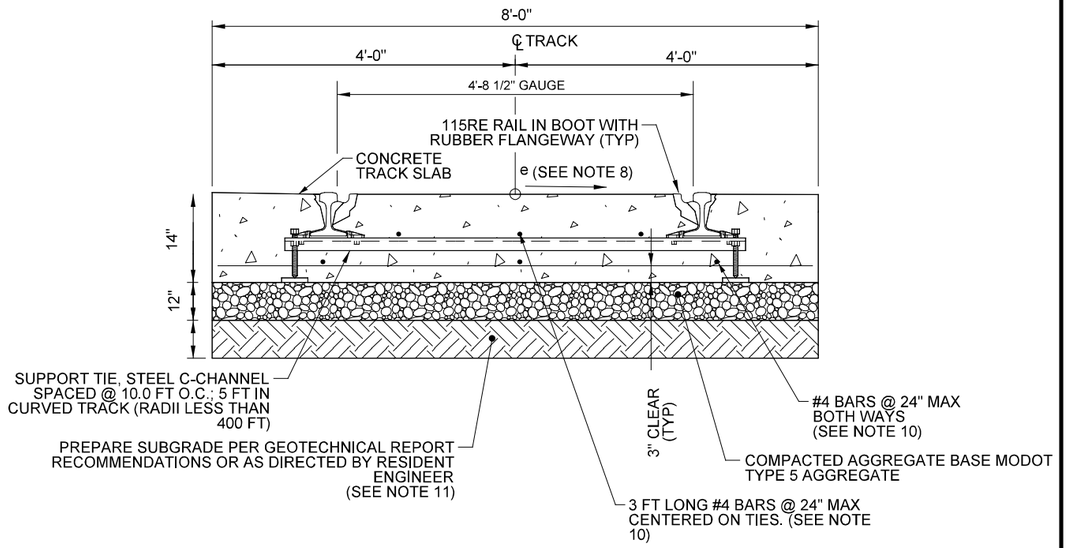

115 RE
TRACK SLAB DETAIL
NOT TO SCALE
D

REV	DATE	DESCRIPTION

PLOT DATE: 1/30/2019 4:35:43 PM

DESIGNED BY	BMV
CHECKED BY	DHT
DRAWN BY	AR
CHECKED BY	BMV
APPROVED BY	DHT
DATE	

RideKC STREETCAR

30% DESIGN DATE: 01-31-2019

BURNS McDONNELL
9400 Ward Parkway
Kansas City, MO 64114
(816) 333-9400

NOT FOR CONSTRUCTION

RIVERFRONT STREETCAR EXTENSION

EMBEDDED TRACK TO BALLAST TRACK TRANSITION

SCALE FOR 22"x34":	NTS
FILENAME:	K-TD-1009.dgn
CONTRACT NO.:	XXXXXXXXX
CERTIFICATE OF AUTHORITY:	XXXXXXXXX
DRAWING NO.:	K-TD-1009
SHEET NO.:	43

1-31-19
30% DESIGN
NOT FOR CONSTRUCTION

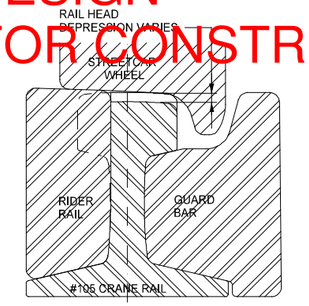

SECTION A

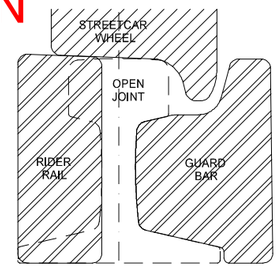

SECTION B

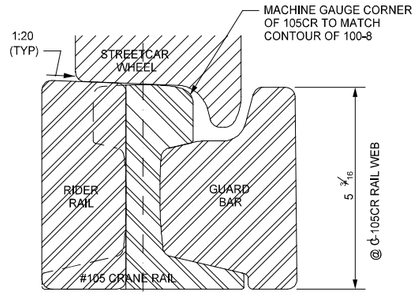

SECTION C

NOTES:

1. RAIL EXPANSION JOINTS SHALL BE FABRICATED IN ACCORDANCE WITH CONTRACT SPECIFICATIONS AND THE AREMA SPECIFICATIONS FOR SPECIAL TRACKWORK.
2. THE COMPONENT PARTS FOR RAIL EXPANSION JOINTS IN CURVED TRACK SHALL MATCH THE RADIUS OF THE CURVE OR SPIRAL THROUGHOUT THEIR FULL LENGTH.
3. RAIL EXPANSION JOINT IS SHOWN FABRICATED FROM THICK WEB 105CR CRANE RAIL SO AS TO PROVIDE MAXIMUM STRENGTH. OTHER THICK WEB SECTIONS, SUCH AS CEN FULL WEB SECTION 60E1F1, MAY BE CONSIDERED, BUT SHALL BE MACHINED SO AS TO BE BOTH NOT TALLER THAN THE 100-8 RAIL SECTION AND MATCH THE HEAD AND GAUGE CORNER RADII OF THE 100-8 RAIL. RAIL SECTION USED SHALL BE METALLURGICALLY COMPATIBLE WITH HEAD HARDENED 100-8 TEE RAIL SO AS TO FACILITATE A FLASH BUTT WELD BETWEEN THE TWO RAIL SECTIONS.
4. RAIL EXPANSION JOINT AND THE TRACK BOX CONTAINING IT SHALL BE ENTIRELY ON ONE SIDE OF THE BRIDGE DECK EXPANSION DAM. THE MOVING END OF RAIL EXPANSION JOINT SHALL BE ADJACENT TO THE BRIDGE DECK EXPANSION DAM.
5. SEE DRAWING G-TD-1037 FOR ADDITIONAL TRACK BOX DETAILS.

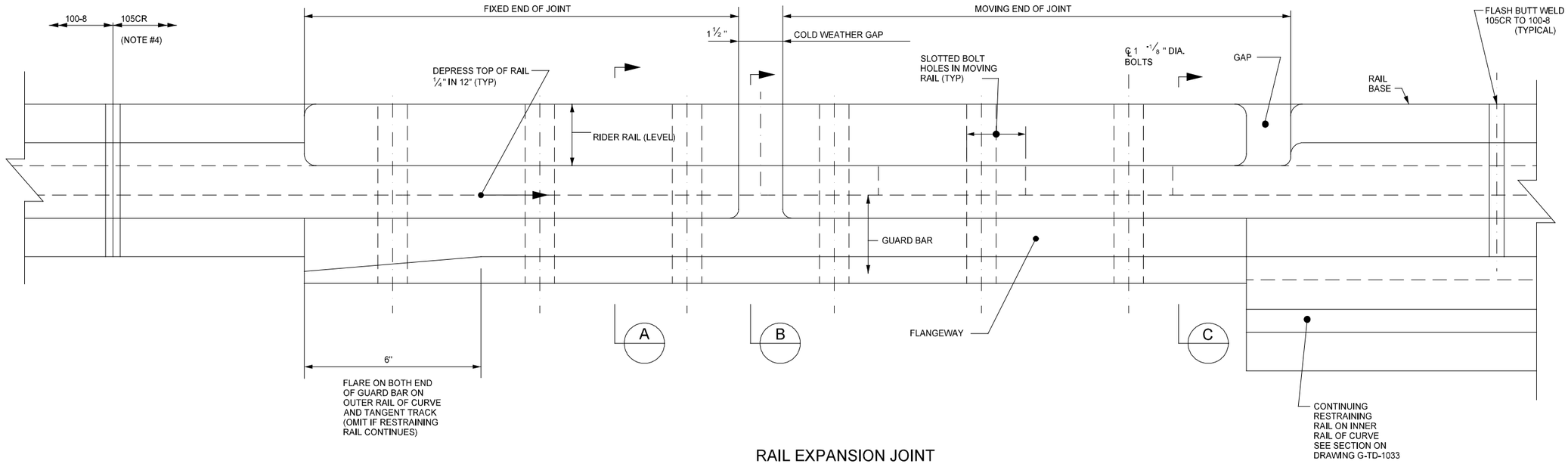

RAIL EXPANSION JOINT

REV	DATE	DESCRIPTION

PLOT DATE: 1/30/2019 4:35:47 PM

DESIGNED BY	BMV
CHECKED BY	DHT
DRAWN BY	AR
CHECKED BY	BMV
APPROVED BY	DHT
DATE	

RideKC STREETCAR

30% DESIGN DATE: 01-31-2019

BURNS McDONNELL
9400 Ward Parkway
Kansas City, MO 64114
(816) 333-9400

NOT FOR CONSTRUCTION

RIVERFRONT STREETCAR EXTENSION

RAIL EXPANSION JOINTS

SCALE FOR 22"x34":	NTS
FILENAME:	K-TD-1010.dgn
CONTRACT NO.:	XXXXXXXX
CERTIFICATE OF AUTHORITY:	XXXXXXXXX
DRAWING NO.:	K-TD-1010
SHEET NO.:	44

1-31-19
30% DESIGN
NOT FOR CONSTRUCTION

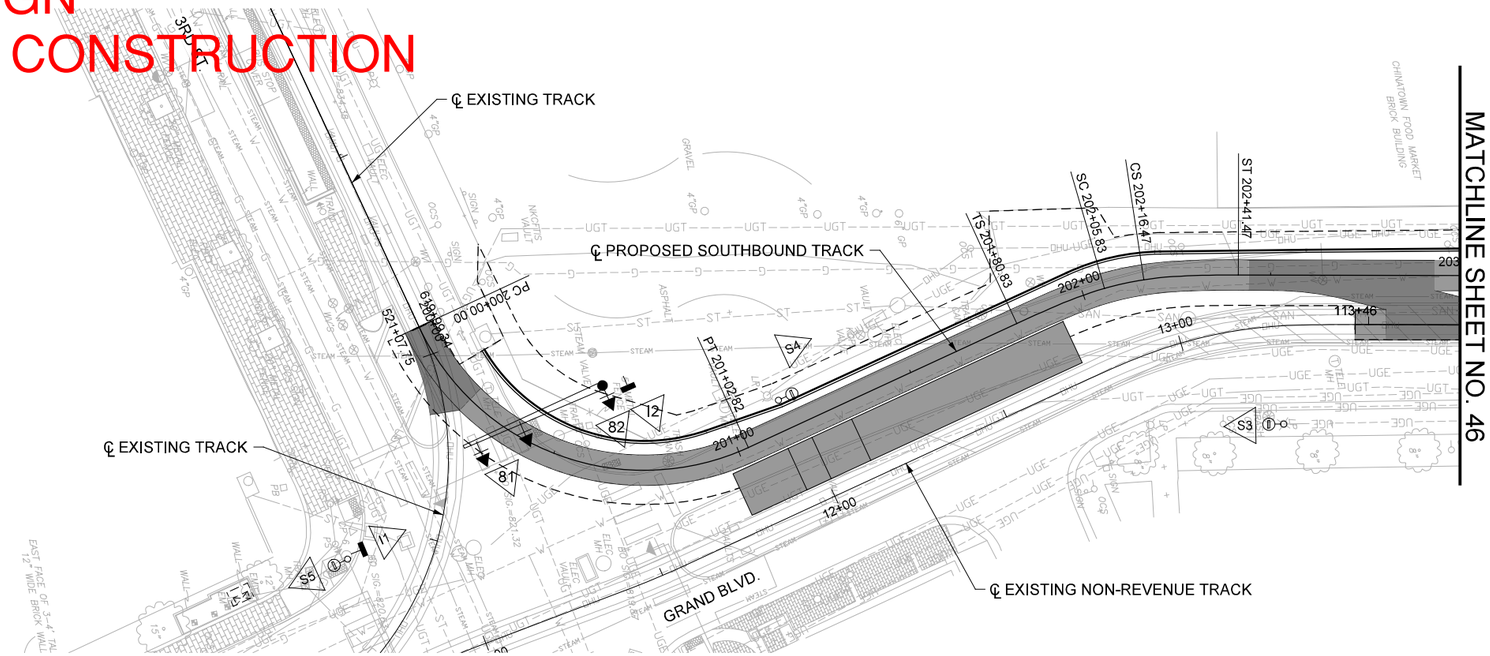

MATCHLINE SHEET NO. 46

GENERAL NOTES

R
Y
G

81, 82

R3-1
I1, I2

LEGEND

- ILLUMINATED SIGN
- TRAFFIC SIGNAL HEAD WITH BACKPLATE
- VEHICULAR DETECTION CAMERA
- TRANSIT SIGNAL HEAD

SCALE
0 20 40 60

REV	DATE	DESCRIPTION

PLOT DATE: 1/30/2019 4:36:00 PM

DESIGNED BY	BMV
CHECKED BY	DHT
DRAWN BY	AR
CHECKED BY	BMV
APPROVED BY	DHT
DATE	

RideKC STREETCAR

30% DESIGN DATE: 01-31-2019

BURNS McDONNELL
9400 Ward Parkway
Kansas City, MO 64114
(816) 333-9400

NOT FOR CONSTRUCTION

RIVERFRONT STREETCAR EXTENSION

NORTHBOUND AND SOUTHBOUND TRACK
TRAFFIC SIGNAL LAYOUT
3RD ST/GRAND BOULEVARD

SCALE FOR 22"x34":	1"=20'
FILENAME:	T-TS-1001.dgn
CONTRACT NO.:	XXXXXXXXX
CERTIFICATE OF AUTHORITY:	XXXXXXXXXX
DRAWING NO.:	T-TS-1001
SHEET NO.:	45

1-31-19
30% DESIGN
NOT FOR CONSTRUCTION

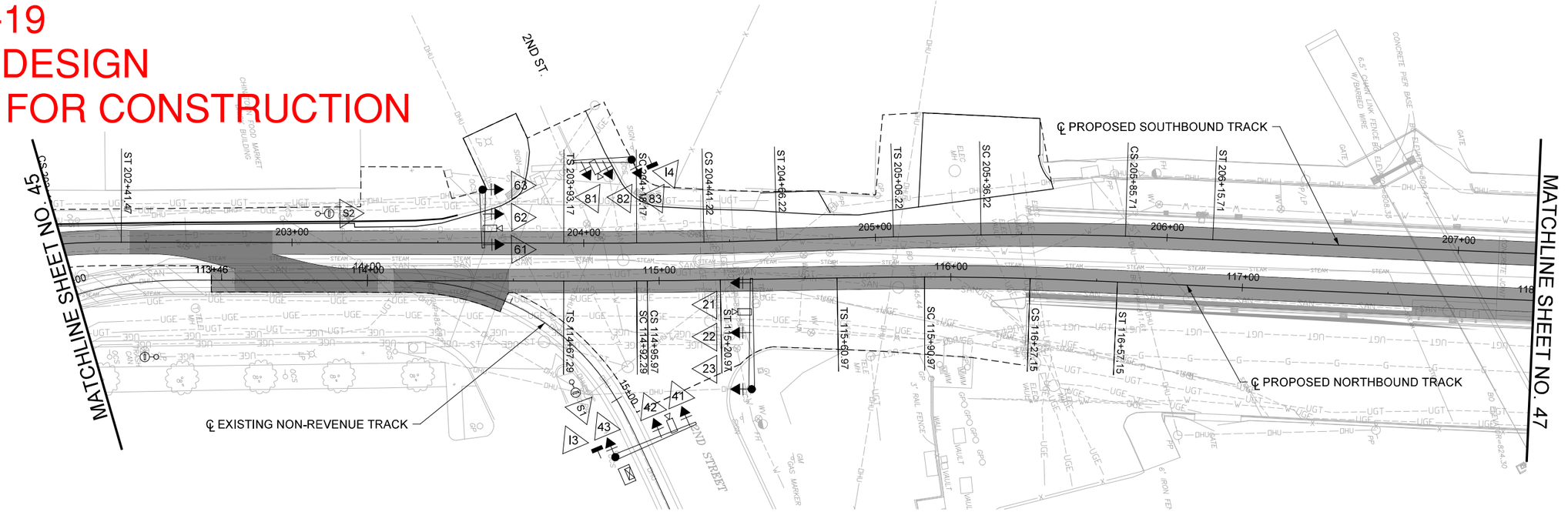

RED
LUNAR WHITE
LUNAR WHITE
S1, S3

RED
LUNAR WHITE
LUNAR WHITE
S5

RED
LUNAR WHITE
S2, S4

LRT SIGNAL HEAD DETAIL
12" (LED) LENSES

R3-1
I3, I4

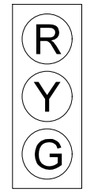

21, 22, 23,
41, 42, 43,
61, 62, 63,
81, 82, 83

GENERAL NOTES

LEGEND

- ILLUMINATED SIGN
- TRAFFIC SIGNAL HEAD WITH BACKPLATE
- VEHICULAR DETECTION CAMERA
- TRANSIT SIGNAL HEAD

SCALE
0 20 40 60

REV	DATE	DESCRIPTION

PLOT DATE: 1/30/2019 4:36:05 PM

DESIGNED BY BMV
CHECKED BY DHT
DRAWN BY AR
CHECKED BY BMV
APPROVED BY DHT
DATE

RideKC STREETCAR

30% DESIGN DATE: 01-31-2019

BURNS McDONNELL
9400 Ward Parkway
Kansas City, MO 64114
(816) 333-9400

NOT FOR CONSTRUCTION

RIVERFRONT STREETCAR EXTENSION

NORTHBOUND AND SOUTHBOUND TRACK
TRAFFIC SIGNAL LAYOUT
2ND ST/GRAND BOULEVARD

SCALE FOR 22"x34": 1"=20'
FILENAME: T-TS-I002.dgn
CONTRACT NO.: XXXXXXXXX
CERTIFICATE OF AUTHORITY: XXXXXXXXXX
DRAWING NO.: T-TS-I002
SHEET NO.: 46

1-31-19
30% DESIGN
NOT FOR CONSTRUCTION

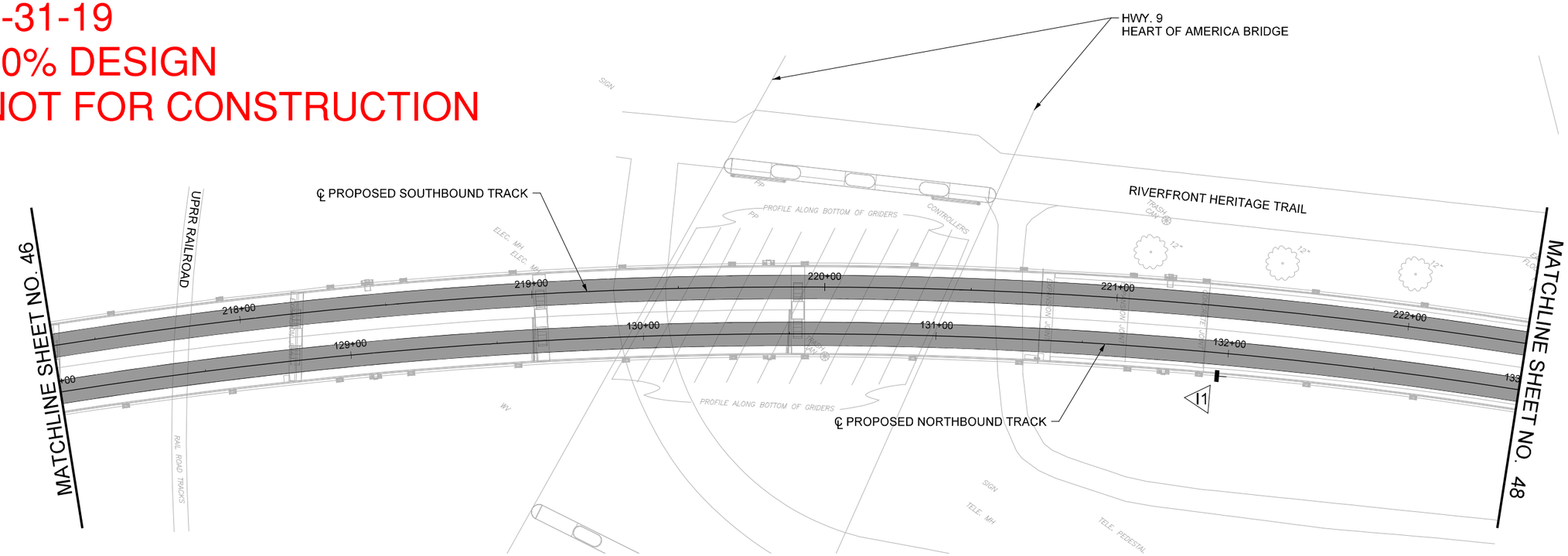

500 FT
AHEAD
DO NOT
FOLLOW
STREETCAR
OFF ROAD

I1

LEGEND

- ILLUMINATED SIGN
- TRAFFIC SIGNAL HEAD WITH BACKPLATE
- VEHICULAR DETECTION CAMERA
- TRANSIT SIGNAL HEAD

SCALE
0 20 40 60

REV	DATE	DESCRIPTION

PLOT DATE: 1/30/2019 4:36:10 PM

DESIGNED BY	BMV
CHECKED BY	DHT
DRAWN BY	AR
CHECKED BY	BMV
APPROVED BY	DHT
DATE	

RideKC STREETCAR

30% DESIGN DATE: 01-31-2019

BURNS McDONNELL
9400 Ward Parkway
Kansas City, MO 64114
(816) 333-9400

NOT FOR CONSTRUCTION

RIVERFRONT STREETCAR EXTENSION

NORTHBOUND AND SOUTHBOUND TRACK
TRAFFIC SIGNAL LAYOUT
GRAND BOULEVARD
NB STA. 128+00 TO 133+00

SCALE FOR 22"x34":	1"=20'
FILENAME:	T-TS-1004.dgn
CONTRACT NO.:	XXXXXXXXX
CERTIFICATE OF AUTHORITY:	XXXXXXXXXX
DRAWING NO.:	T-TS-1004
SHEET NO.:	47

1-31-19
30% DESIGN
NOT FOR CONSTRUCTION

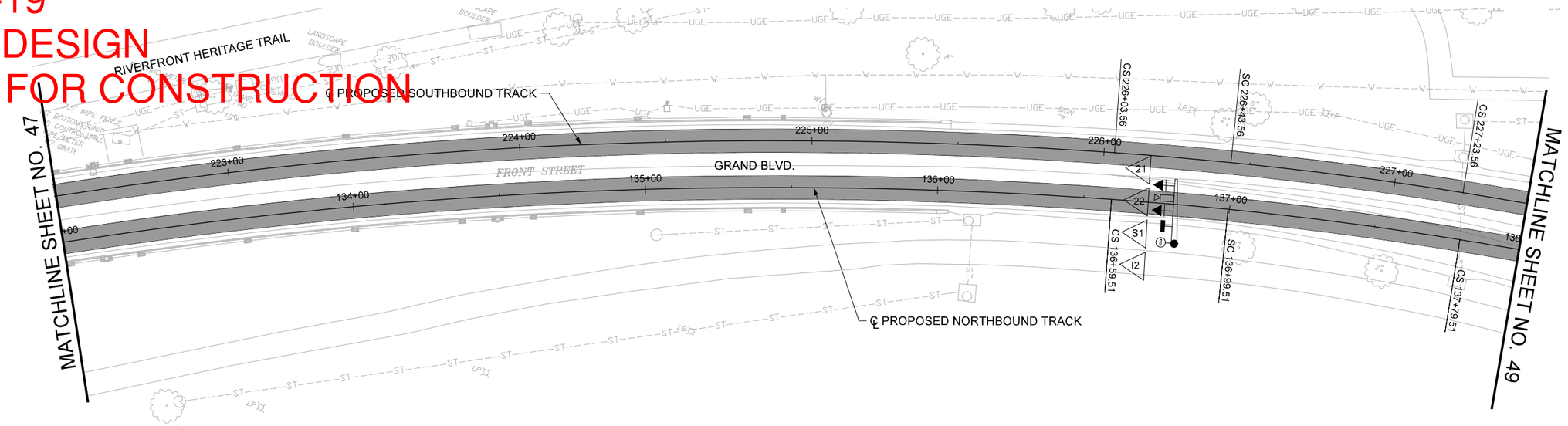

R
Y
G

21, 22

RED
LUNAR WHITE
LUNAR WHITE

S3,S5

RED
LUNAR WHITE

S1,S2,S4

LRT SIGNAL HEAD DETAIL
12" (LED) LENSES

DO NOT FOLLOW STREETCAR OFF ROAD

I2

LEGEND

- ILLUMINATED SIGN
- TRAFFIC SIGNAL HEAD WITH BACKPLATE
- VEHICULAR DETECTION CAMERA
- TRANSIT SIGNAL HEAD

SCALE
0 20 40 60

REV	DATE	DESCRIPTION

PLOT DATE: 1/30/2019 4:36:20 PM

DESIGNED BY	BMV
CHECKED BY	DHT
DRAWN BY	AR
CHECKED BY	BMV
APPROVED BY	DHT
DATE	

RideKC STREETCAR

30% DESIGN DATE: 01-31-2019

BURNS McDONNELL
9400 Ward Parkway
Kansas City, MO 64114
(816) 333-9400

NOT FOR CONSTRUCTION

RIVERFRONT STREETCAR EXTENSION

NORTHBOUND AND SOUTHBOUND TRACK
TRAFFIC SIGNAL LAYOUT
GRAND BOULEVARD
NB STA. 133+00 TO 138+00

SCALE FOR 22"x34":	1"=20'
FILENAME:	T-TS-1005.dgn
CONTRACT NO.:	XXXXXXXXX
CERTIFICATE OF AUTHORITY:	XXXXXXXXXX
DRAWING NO.:	T-TS-1005
SHEET NO.:	48

1-31-19
30% DESIGN
NOT FOR CONSTRUCTION

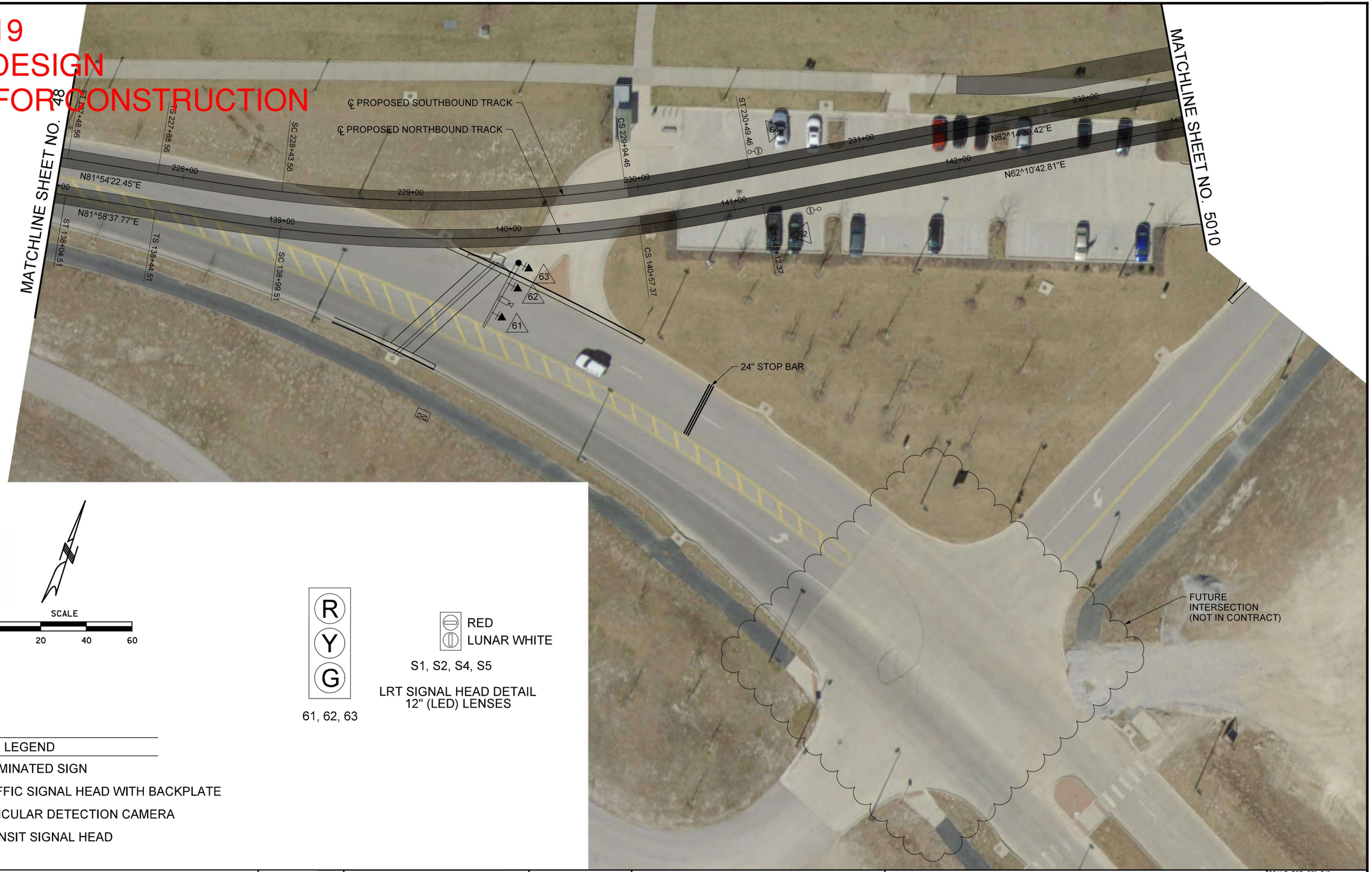

SCALE
0 20 40 60

R
Y
G

61, 62, 63

RED
LUNAR WHITE

S1, S2, S4, S5

LRT SIGNAL HEAD DETAIL
12" (LED) LENSES

LEGEND

- ILLUMINATED SIGN
- TRAFFIC SIGNAL HEAD WITH BACKPLATE
- VEHICULAR DETECTION CAMERA
- TRANSIT SIGNAL HEAD

REV	DATE	DESCRIPTION

PLOT DATE: 1/30/2019 4:37:23 PM

DESIGNED BY	BMV
CHECKED BY	DHT
DRAWN BY	AR
CHECKED BY	BMV
APPROVED BY	DHT
DATE	

RideKC STREETCAR

30% DESIGN DATE: 01-31-2019

BURNS McDONNELL
9400 Ward Parkway
Kansas City, MO 64114
(816) 333-9400

NOT FOR CONSTRUCTION

RIVERFRONT STREETCAR EXTENSION

NORTHBOUND AND SOUTHBOUND TRACK
TRAFFIC SIGNAL LAYOUT
GRAND BOULEVARD
NB STA. 138+00 TO 143+00

SCALE FOR 22"x34":	1"=20'
FILENAME:	T-TS-1006.dgn
CONTRACT NO.:	XXXXXXXX
CERTIFICATE OF AUTHORITY:	XXXXXXXXX
DRAWING NO.:	T-TS-1006
SHEET NO.:	49

1-31-19
30% DESIGN
NOT FOR CONSTRUCTION

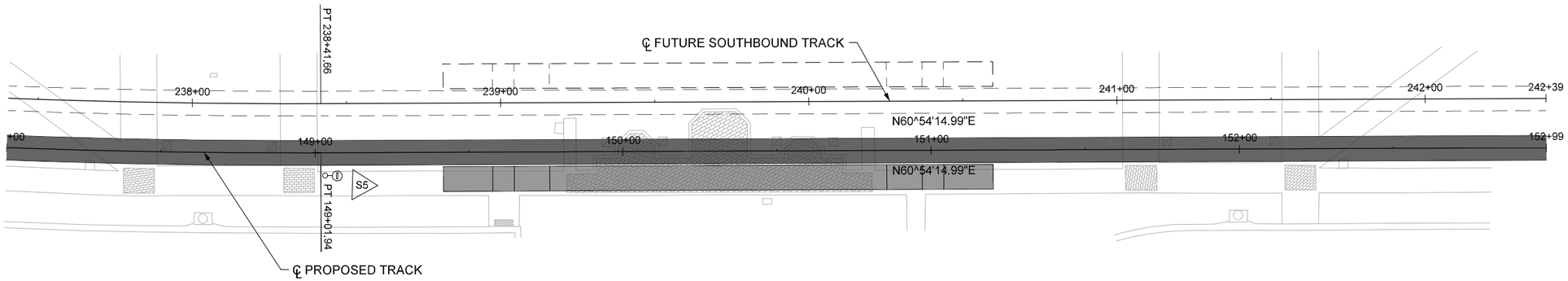

LEGEND

- ILLUMINATED SIGN
- TRAFFIC SIGNAL HEAD WITH BACKPLATE
- VEHICULAR DETECTION CAMERA
- TRANSIT SIGNAL HEAD

SCALE
0 20 40 60

REV	DATE	DESCRIPTION

PLOT DATE: 1/30/2019 4:44:21 PM

DESIGNED BY	BMV
CHECKED BY	DHT
DRAWN BY	AR
CHECKED BY	BMV
APPROVED BY	DHT
DATE	

RideKC STREETCAR

30% DESIGN DATE: 01-31-2019

BURNS McDONNELL
9400 Ward Parkway
Kansas City, MO 64114
(816) 333-9400

NOT FOR CONSTRUCTION

RIVERFRONT STREETCAR EXTENSION

NORTHBOUND AND SOUTHBOUND TRACK
TRAFFIC SIGNAL LAYOUT
GRAND BOULEVARD
NB STA. 148+00 TO 153+00

SCALE FOR 22"x34":	1"=20'
FILENAME:	T-TS-1008.dgn
CONTRACT NO.:	XXXXXXXXX
CERTIFICATE OF AUTHORITY:	XXXXXXXXXX
DRAWING NO.:	T-TS-1008
SHEET NO.:	50

1-31-19
30% DESIGN
NOT FOR CONSTRUCTION

CITY OF KANSAS CITY, MISSOURI

KANSAS CITY STREETCAR AUTHORITY

RIVERFRONT EXTENSION STREETCAR PROJECT

VOLUME 2 - BIKE/PEDESTRIAN BRIDGE

30% SUBMITTAL

PROJECT NO.:

UTILITY CONTACTS

(T50N, R33W)

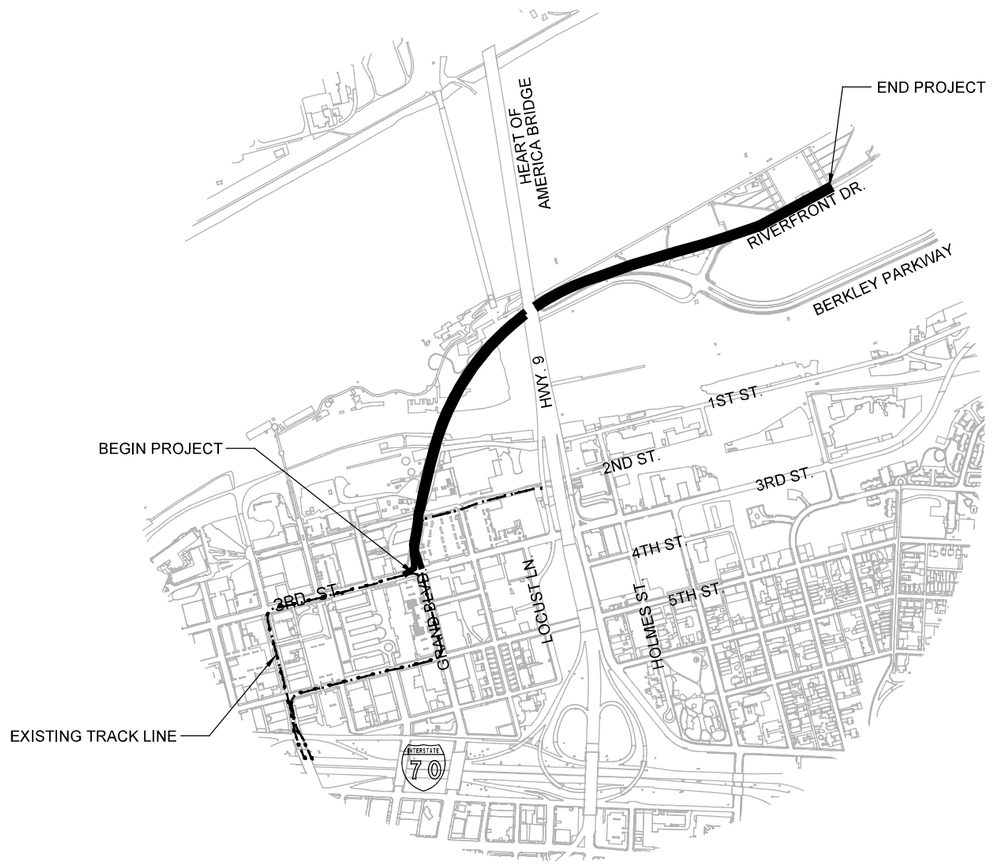

APPROVED BY _____
ASSISTANT CITY ENGINEER

_____
CITY ENGINEER

_____
DEPUTY PROJECT MANAGER

_____
DIRECTOR OF PUBLIC WORKS

_____
ENTRY NO.

PROJECT NO. _____ - _____ C.D. NO. _____ - _____

LENGTH OF PROJECT

BEGINNING OF PROJECT
END OF PROJECT
PROJECT TRACK LENGTH
EQUATIONS & EXCEPTIONS
TOTAL TRACK LENGTH

BURNS McDONNELL
9400 Ward Parkway
Kansas City, MO 64114
(816) 333-9400

SCALE FOR 22"x34":	
FILENAME: G-GP-1001.dgn	
CONTRACT NO.: XXXXXXXXX	
VOLUME: XXXXXXXXX	
DRAWING NO.: G-GP-1001	SHEET NO.: 1

1-31-19
30% DESIGN
NOT FOR CONSTRUCTION

REV	DATE	DESCRIPTION

PLOT DATE: 10/26/2018 10:22:22 AM

DESIGNED BY	CDH
CHECKED BY	MMD
DRAWN BY	DEB
CHECKED BY	DLS
APPROVED BY	DLS
DATE	10/26/18

30% DESIGN DATE: **10-26-2018**

BURNS McDONNELL
9400 Ward Parkway
Kansas City, MO 64114
(816) 333-9400

HDR Engineering, Inc.
10450 Holmes Rd.
Suite 600
Kansas City, MO 64131
816-360-2700
Certificate of Authority: 000856

NOT FOR CONSTRUCTION

KANSAS CITY DOWNTOWN STREETCAR

RIVERFRONT STREETCAR EXTENSION
GRAND AVENUE BRIDGE
AND
NEW BIKE/PEDESTRIAN PATHWAY BRIDGE

SCALE FOR 22"x34":	1" = 200'
FILENAME:	Sheet..001..Overall
CONTRACT NO.:	XXXXXXXXX
CERTIFICATE OF AUTHORITY:	000856
DRAWING NO.:	SHEET NO.:

1-31-19

30% DESIGN

NOT FOR CONSTRUCTION

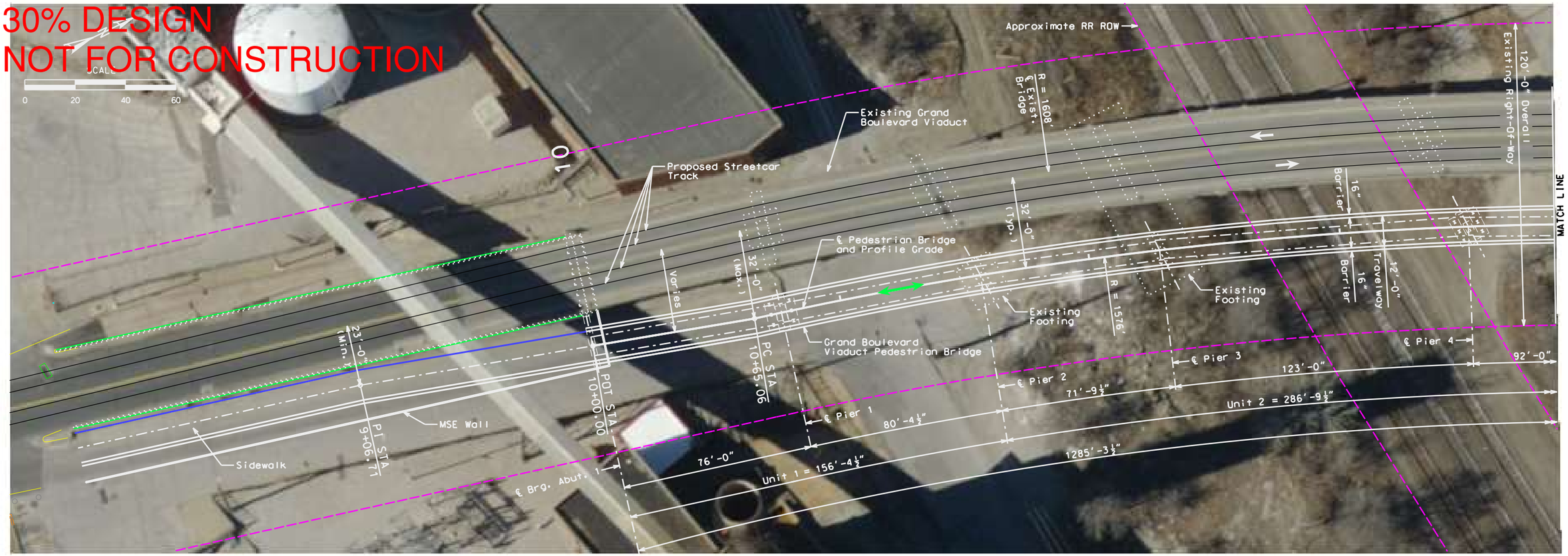

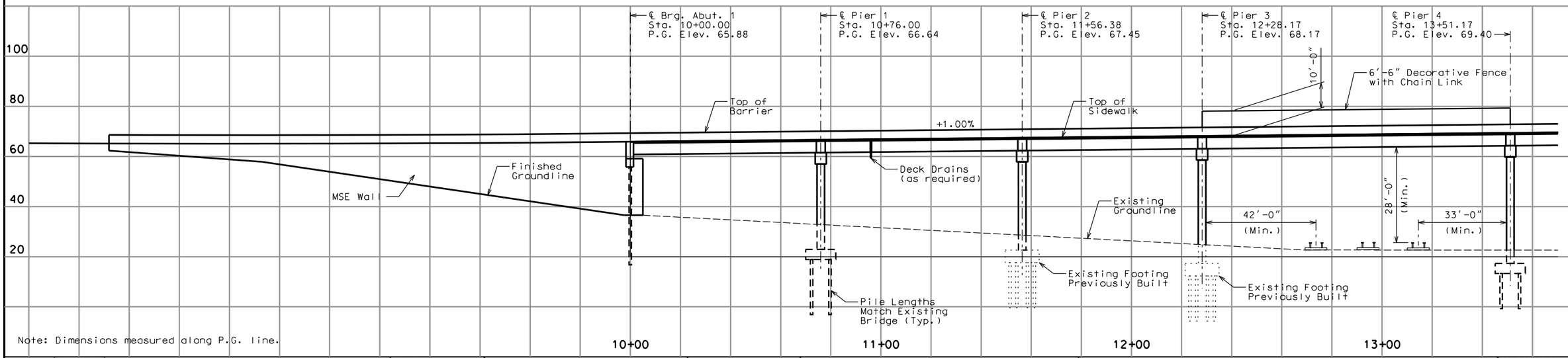

Note: Dimensions measured along P.G. line.

REV	DATE	DESCRIPTION

PLOT DATE: 10/26/2018 10:26:29 AM

DESIGNED BY	CDH
CHECKED BY	MMD
DRAWN BY	DEB
CHECKED BY	DLS
APPROVED BY	DLS
DATE	10/26/18

30% DESIGN DATE: 10-26-2018

BURNS McDONNELL
9400 Ward Parkway
Kansas City, MO 64114
(816) 333-9400

HDR Engineering, Inc.
10450 Holmes Rd.
Suite 600
Kansas City, MO 64131
816-360-2700
Certificate of Authority: 000856

NOT FOR CONSTRUCTION

KANSAS CITY DOWNTOWN STREETCAR

RIVERFRONT STREETCAR EXTENSION
GRAND AVENUE BRIDGE
AND
NEW BIKE/PEDESTRIAN PATHWAY BRIDGE

SCALE FOR 22"x34":	1" = 20'
FILENAME:	Sheet..002..PP
CONTRACT NO.:	XXXXXXXXX
CERTIFICATE OF AUTHORITY:	000856
DRAWING NO.:	SHEET NO.:

1-31-19

30% DESIGN
NOT FOR CONSTRUCTION

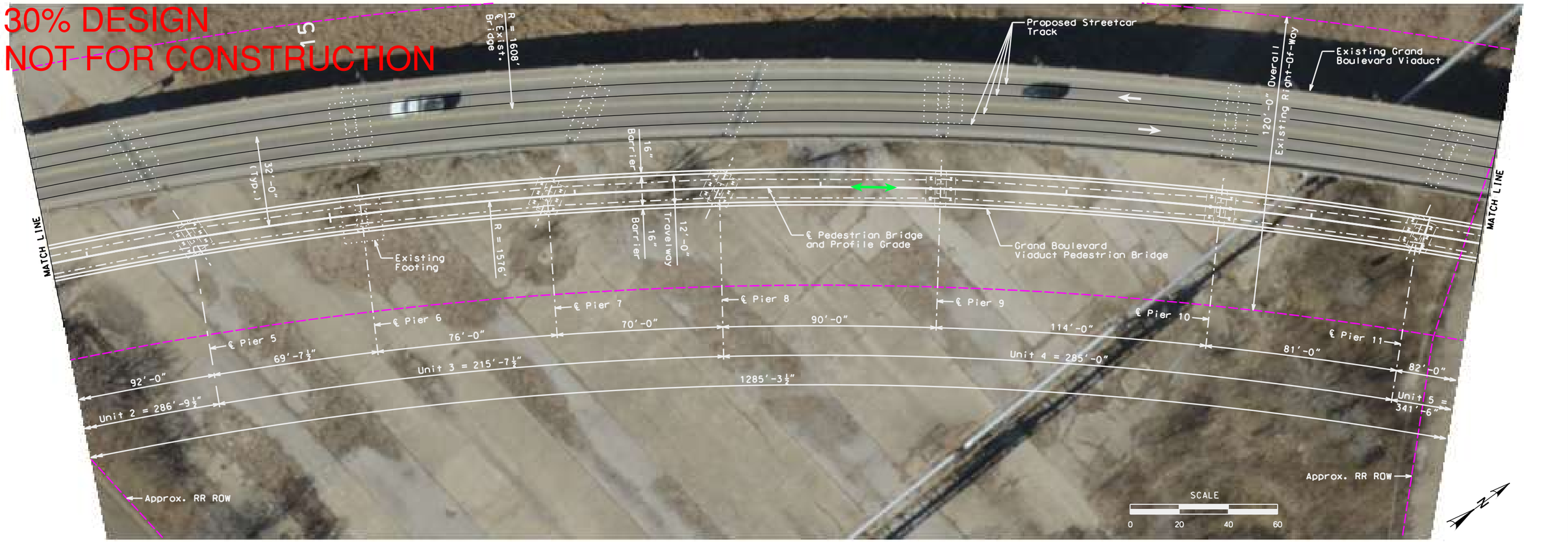

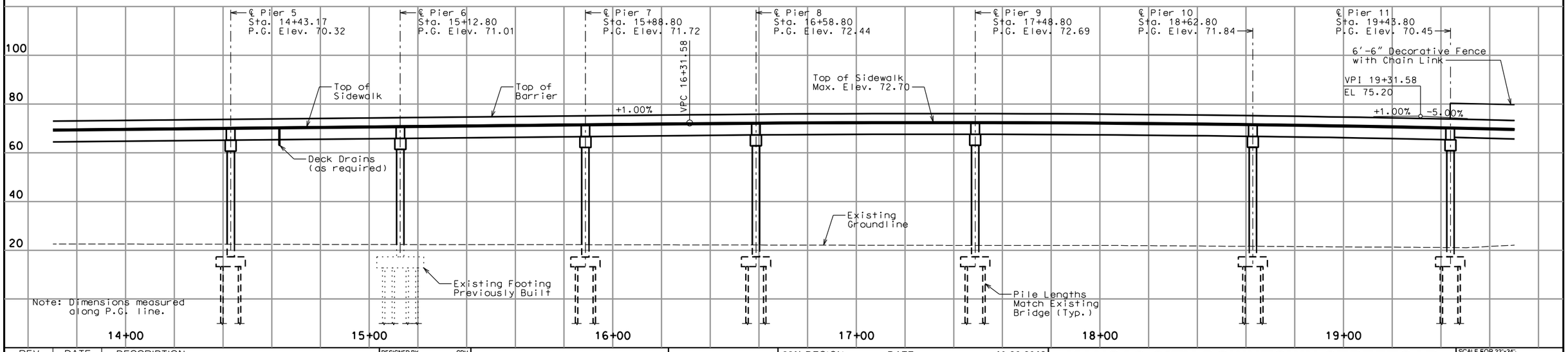

REV	DATE	DESCRIPTION

PLOT DATE: 10/26/2018 10:48:10 AM

DESIGNED BY	CDH
CHECKED BY	MMD
DRAWN BY	DEB
CHECKED BY	DLS
APPROVED BY	DLS
DATE	10/26/18

30% DESIGN DATE: 10-26-2018

BURNS McDONNELL
9400 Ward Parkway
Kansas City, MO 64114
(816) 333-9400

HDR Engineering, Inc.
10450 Holmes Rd.
Suite 600
Kansas City, MO 64131
816-360-2700
Certificate of Authority: 000856

NOT FOR CONSTRUCTION

KANSAS CITY DOWNTOWN STREETCAR

RIVERFRONT STREETCAR EXTENSION
GRAND AVENUE BRIDGE
AND
NEW BIKE/PEDESTRIAN PATHWAY BRIDGE

SCALE FOR 22"x34":	1" = 20'
FILENAME:	Sheet..003..PP
CONTRACT NO.:	xxxxxxxxx
CERTIFICATE OF AUTHORITY:	000856
DRAWING NO.:	SHEET NO.:

1-31-19

30% DESIGN
NOT FOR CONSTRUCTION

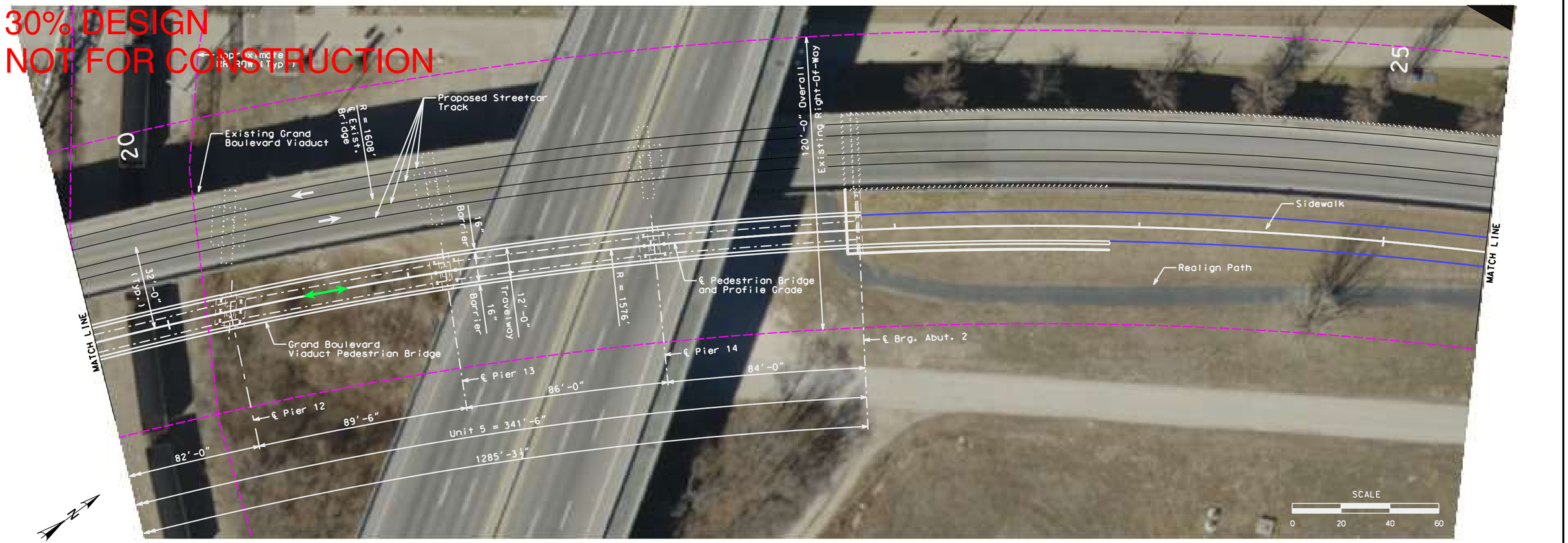

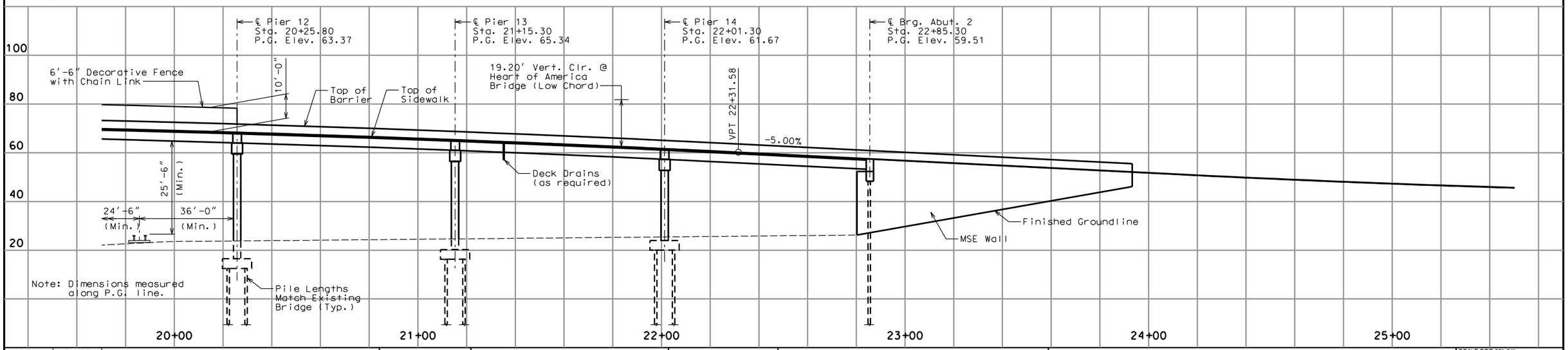

REV	DATE	DESCRIPTION

PLOT DATE: 10/26/2018 11:00:01 AM

DESIGNED BY	CDH
CHECKED BY	MMD
DRAWN BY	DEB
CHECKED BY	DLS
APPROVED BY	DLS
DATE	10/26/18

30% DESIGN DATE: **10-26-2018**

BURNS McDONNELL
9400 Ward Parkway
Kansas City, MO 64114
(816) 333-9400

HDR Engineering, Inc.
10450 Holmes Rd.
Suite 600
Kansas City, MO 64131
816-360-2700
Certificate of Authority: 000856

NOT FOR CONSTRUCTION

KANSAS CITY DOWNTOWN STREETCAR

RIVERFRONT STREETCAR EXTENSION
GRAND AVENUE BRIDGE
AND
NEW BIKE/PEDESTRIAN PATHWAY BRIDGE

SCALE FOR 22"x34":	1" = 20'
FILENAME:	Sheet..004..PP
CONTRACT NO.:	XXXXXXXXX
CERTIFICATE OF AUTHORITY:	000856
DRAWING NO.:	SHEET NO.:

1-31-19
30% DESIGN
NOT FOR CONSTRUCTION

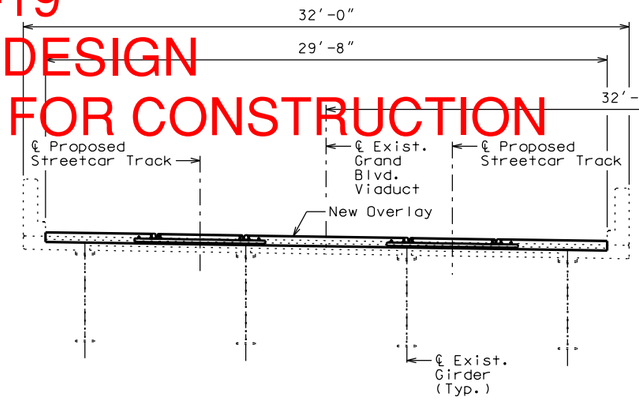

EXIST. GRAND BOULEVARD SECTION
Proposed Overlay and Streetcar Track shown

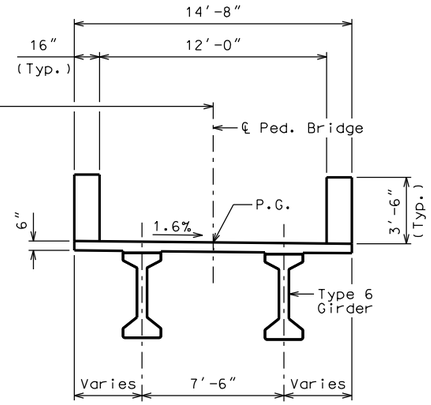

TYPICAL SECTION
At Units 1-4.

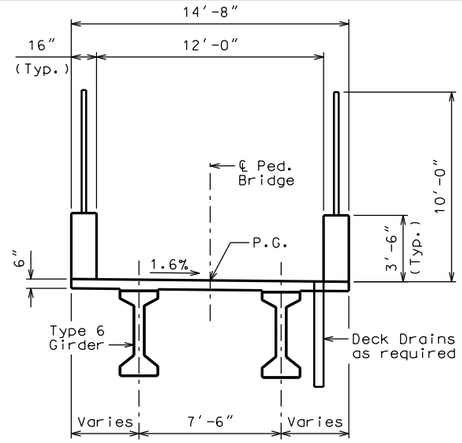

TYPICAL SECTION OVER RAILROAD

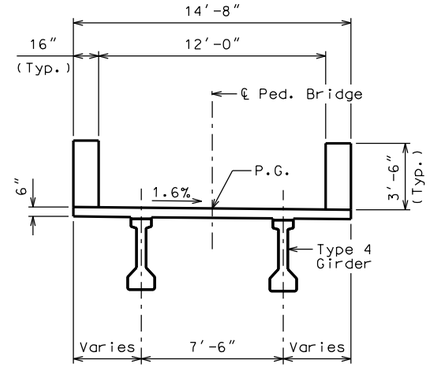

TYPICAL SECTION
At Unit 5.

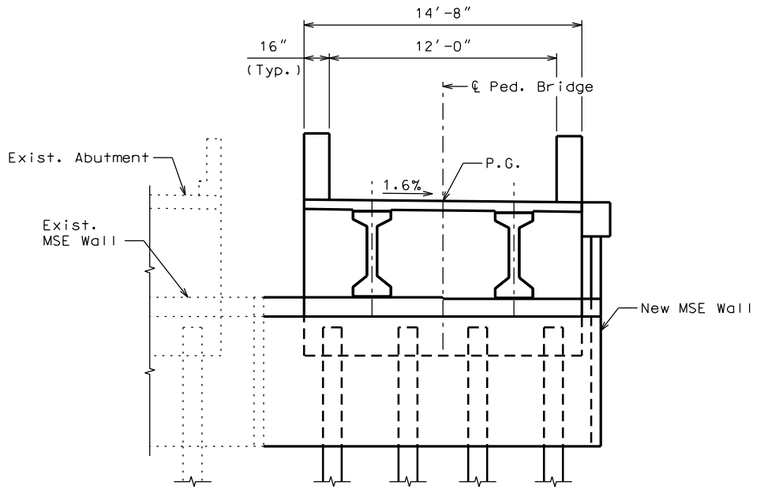

ABUTMENT SECTION
Abut. 1 shown. Abut. 2 similar
Looking back

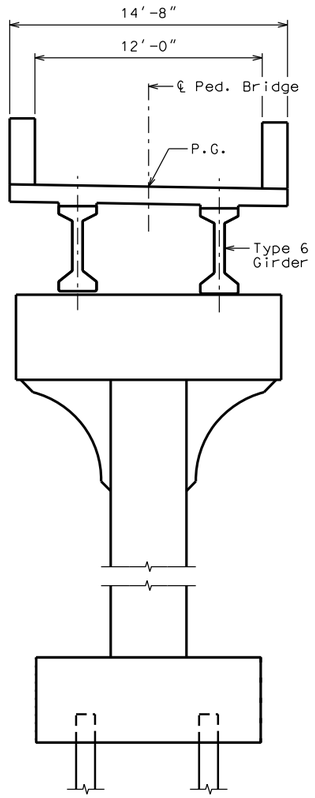

PIER SECTION
Pier 2 shown, other piers similar.

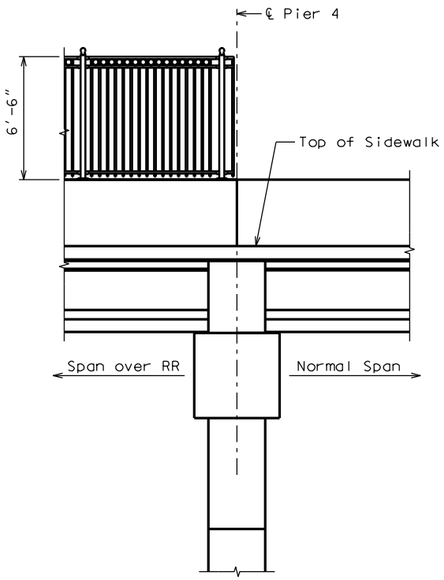

PIER ELEVATION
Pier 4 shown, other piers similar over RR.

NOTES:

DESIGN SPECIFICATIONS:
AASHTO LRFD Guide Specifications for the Design of Pedestrian Bridges.
DESIGN LOADING:
H10 Truck or 90psf Pedestrian
UNIT STRESSES:

Concrete	f'c = 4 ksi
Reinforcing Steel (Grade 60)	fy = 60 ksi
Prestressed Concrete Girder	f'c = 8000 psi
	f'ci = 6500 psi

REV	DATE	DESCRIPTION

PLOT DATE: 10/26/2018 11:27:59 AM

DESIGNED BY	CDH
CHECKED BY	MMD
DRAWN BY	DEB
CHECKED BY	DLS
APPROVED BY	DLS
DATE	10/26/18

30% DESIGN DATE: **10-26-2018**

BURNS McDONNELL
9400 Ward Parkway
Kansas City, MO 64114
(816) 333-9400

HDR Engineering, Inc.
10450 Holmes Rd.
Suite 600
Kansas City, MO 64131
816-360-2700
Certificate of Authority: 000856

NOT FOR CONSTRUCTION

KANSAS CITY DOWNTOWN STREETCAR

RIVERFRONT STREETCAR EXTENSION
GRAND AVENUE BRIDGE
AND
NEW BIKE/PEDESTRIAN PATHWAY BRIDGE

SCALE FOR 22"x34":	1/4" = 1'-0"
FILENAME:	Sheet..005..SEC
CONTRACT NO.:	XXXXXXXXX
CERTIFICATE OF AUTHORITY:	000856
DRAWING NO.:	SHEET NO.: