City of Kansas City, Missouri

CITY OF FOUNTAINS
HEART OF THE NATION

KANSAS CITY
MISSOURI

Kansas City Streetcar Main Street Extension

Design Criteria Manual

Revision 2

02/07/2019

Deleted: Downtown

Deleted: 1

Deleted: 03

Deleted: 14

Deleted: 15

Deleted: 2016

KC Downtown Streetcar

Deleted: *DRAFT*

Deleted: *Downtown*

Revision Record

Status	Date	Change/Comment
Rev. 0	8/13/13	
Rev. 1	3/14/16	
Rev. 2	2/7/19	

Deleted: *DRAFT*

Deleted: *Downtown*

TABLE OF CONTENTS

Deleted: *DRAFT*

Deleted: *Downtown*

Deleted: *DRAFT*

Deleted: *Downtown*

Deleted: MAINTENANCE AND STORAGE

Deleted: *DRAFT*

Deleted: *Downtown*

Deleted: *DRAFT*

Deleted: *Downtown*

Deleted: *DRAFT*

Deleted: *Downtown*

Deleted: *DRAFT*

Deleted: *Downtown*

Deleted: *DRAFT*

Deleted: *Downtown*

FIGURES

TABLES

Deleted: *DRAFT*
Deleted: *Downtown*

1.0 GENERAL

1.1 Purpose and Scope

The purpose of this manual is to establish the standards and guidelines for the engineering design and construction of the Kansas City Streetcar Main Street Extension. The material contained herein is also intended to provide a uniform basis for the design of any streetcar project that might be undertaken by the City of Kansas City Missouri (KCMO). Its purpose is to provide sufficient information to allow the development of preliminary and final designs including estimates of capital, operating and maintenance costs, and determination of the potential impacts of operations and construction on the communities.

Deleted: Modern
Deleted: system

The following design criteria provide the basis for uniform design and are not a substitute for engineering judgment and sound engineering practice that will be encountered during project development. It is the responsibility of the designer to expand upon the general framework of the design criteria to a level of detail consistent with the level of design. The designers are encouraged to analyze alternative approaches to solving design problems to determine the most cost-effective sustainable and environmentally sound solution.

Deleted: provides

This Design Criteria Manual is to be used by designers to develop designs that meet the intent stated. In situations where deviations to the criteria are encountered, the designer is to submit a written waiver request to KCMO for approval of such deviations. Upon final submission of the Plans, Specifications, and Estimates, all deviations shall be approved by KCMO.

Deleted: design
Deleted: criteria
Deleted: manual

1.2 Climate Conditions

The Kansas City metropolitan area is located in the Midwest United States and is 1,026 feet above sea level. Climate conditions can be varied; however, summer temperatures are warm with July being the hottest month and having an average high temperature of 90° Fahrenheit (F) and a record high of 113° F recorded on August 14, 1936. The metropolitan area has cold winters with January being the coldest month and having an average low temperature of 22° F and a record low of -23° F recorded on December 22, 1989.

Like typical Midwestern cities, the Kansas City metropolitan area is humid with four very different seasons. Moderate rainfall is very typical for the city with the majority coming in late spring and summer. In the colder months annual snowfall averages about 18.8” while ice storms can also be encountered. Kansas City is also subjected to tornadoes which typically occur during the spring. The city itself has not seen a tornado since the late 1800s, but the surrounding areas have more recently encountered devastating tornadoes.

Deleted: *DRAFT*

Deleted: *Downtown*

1.3 System Technology Description

Streetcar, for the purpose of the applicability of the criteria specified herein, denotes an urban transit system technology featuring electrically propelled modern articulated low-floor vehicles that ride on steel wheels that run along steel rails, and utilize power drawn from an overhead wire (or off-wire and powered by on-board energy storage) to travel along both city streets (Mixed-traffic or Non-Exclusive Right-of-Way) and dedicated rights-of-way with street crossing (Semi-Exclusive Right-of-Way).

Deleted: low

Deleted: on

1.4 Application

The material contained in the following chapters provides a uniform basis for design and could be refined and expanded during preliminary engineering and final design.

Deleted: is expected to

This design criteria manual represents a recommended set of uniform and minimum guidelines for use in the development, design, engineering, and implementation of the streetcar project. It is not a specification and therefore, the following criteria are intended to set minimum guidelines to promote design uniformity and consistency of systems, components, and facilities of streetcar infrastructure.

Deleted: assure

These criteria serve as guidelines and do not substitute for engineering judgment and sound engineering practice. More detailed design criteria not deemed broad enough for this manual can be included in the Basis of Design Report by the design consultant(s) but must still adhere to the design criteria contained herein. Specific exceptions may apply in special cases. The designers are responsible for identifying any necessary departure from the criteria contained in this document, and then notifying KCMO's project manager. Any exceptions from or changes to the criteria must be reviewed and approved by KCMO prior to use in the design. Applications for change in criteria, additions to the criteria, and other questions will be submitted in writing.

Deleted: the

The criteria manual may periodically require revisions to reflect changes in environment, industry, engineering, operation, and maintenance, or to reflect policy changes.

1.5 Codes and Standards

In general, codes, criteria, and standards that are promulgated by third parties and regulatory agencies and that are applicable to the design of KCMO-owned facilities are identified in each chapter of the manual. Unless stated otherwise, designers shall verify that they are working with the most recent editions of such documents.

Where facilities that are constructed under a KCMO project will be owned and/or maintained by others, the designer shall verify what criteria that entity may require and obtain same including published criteria, applicable standard drawings, directives, manuals, specifications, as well as any revisions thereto. The designer must keep such criteria up-to-date during the entire design phase of the project.

Deleted: *DRAFT*

Deleted: *Downtown*

1.6 Project Goals

The primary goal of a streetcar project is to provide passengers with the benefits of enhanced public transportation service in a safe, cost-effective, environmentally sensitive and socially responsible manner. To this end, the following policies shall be adhered.

Deleted: improved

1.6.1 Proven Hardware

The streetcar system shall be designed to use proven subsystems hardware and design concepts. All of the major subsystems, such as vehicles, signaling and traction power equipment, shall be supplied by established manufacturers, have a documented operating history of previous and current usage, and be available "off the shelf", so far as practicable. The same requirements shall apply to spare parts. Waiver of these requirements shall be considered only where the alternative subsystem offers substantial technical and cost advantages, is in an advanced state of development and has accumulated substantial test data under near-revenue conditions.

Streetcar procurement is through a competitive bidding by established manufacturers of transportation equipment or through procurement options from other streetcar operating agencies.

1.6.2 Design Life

The streetcar system's fixed facilities (structures and buildings) shall be designed for continued operation over a minimum period of 50 years before complete refurbishment and renovations are necessary due to wear and tear and obsolescence.

Major fixed system equipment (such as substation gear, shop machinery, and streetcar vehicles) shall be designed for a minimum of 30 years before complete replacement becomes necessary, assuming that approved maintenance policies are followed.

1.6.3 Service Integration

The streetcar route is to be part of the overall local and regional transportation system. Specific provisions shall be made for the efficient interchange of passengers with private and other public transportation modes.

Deleted: *DRAFT*

Deleted: *Downtown*

THIS PAGE INTENTIONALLY LEFT BLANK

Deleted: *DRAFT*

Deleted: *Downtown*

2.0 TRACK ALIGNMENT AND TRACKWORK

This chapter establishes the basic track geometry and clearance criteria to be used in the design of the streetcar project.

Except for the requirements established in these criteria and KCMO drafting standards, all geometry and clearances shall follow the AREMA Manual for Railway Engineering and Portfolio of Track Work Plans, "The Track Design Handbook for Light Rail Transit" TCRP Report 155 sponsored by the Federal Transit Administration, and the APTA Guidelines for Design of Rapid Transit Facilities modified as necessary to reflect the physical requirements and operating characteristics of the streetcar project.

2.1 Track Alignment

2.1.1 Horizontal Alignment

Horizontal curvature and super-elevation shall be related to design speed and the acceleration and deceleration characteristics of the design vehicle. The streetcar includes at-grade segments where vehicles will operate on a shared right-of-way with vehicular traffic within local and arterial streets. The track alignment shall be designed to accommodate a maximum design speed according to the following criteria:

- Tangent track – Posted speed (+/- 30-35 MPH)
- Lane shift through intersection – Approximately 15 MPH
- 90 degree turn – Approximately 5-10 MPH

The design speed shall take into account the spacing of stops, location of curves, curve radius, construction limitations, and the performance characteristics of the design vehicle. Geometry constraints will prevent the optimum design speed from being achieved at some locations. The track designer shall provide a speed gradient table describing or illustrating the different design speeds throughout the alignment.

2.1.1.1 Horizontal Tangents

The following criteria provide minimum lengths of horizontal tangent track for a variety of scenarios.

Curves, Switches, Special Trackwork, and Stop Platforms

The minimum length of horizontal tangent track between curved sections, preceding a point of switch, special trackwork, or stop platform shall be as follows:

Deleted: *DRAFT*

Deleted: *Downtown*

Broken Back Curves	Condition	Tangent Length
	Absolute Minimum	3 times the design speed in mph
Reverse	Condition	Tangent Length
	Desirable	40 feet
	Absolute Minimum*	0 feet
Compound Curves	Condition	Tangent Length
	Absolute Minimum	0 feet
Special Trackwork	Condition	Tangent Length
	Absolute Minimum	10 feet
Stop Platform	Condition	Tangent Length
	Desirable Minimum	23** ft beyond platform ends

* Values below the desirable minimum condition require prior written approval from KCMO.

** Designer to submit clearance calculations and figures for approval for all tangents less than 23 feet from the edge of platform

If adjacent **broken back curves** in the same direction, which are in close proximity to one another, cannot be replaced by a single simple curve due to geometric constraints, a series of compound curves with combining spirals shall be the preferred arrangement. Broken back curves, (e.g., short tangents between curves in the same direction) shall be avoided whenever possible.

All **special trackwork** shall be located on a horizontal tangent and the associated points of switches/frog heels shall be located an absolute minimum distance of 10 feet from a point of horizontal curvature.

At **stop platforms**, the horizontal alignment shall be tangent throughout the entire length of the platform. The tangent track shall also be extended beyond both ends of the platform by a desired minimum distance of 23 feet so that the streetcar clearance envelope does not overhang any portion of the platform as the streetcar approaches and leaves the stop. If the tangent cannot be extended 23 feet from the platform ends, the clearances between the platform and the vehicle inswing and outswing shall be checked to provide the minimum required clearance between the vehicle and the platform structure. For tangents less than 23 feet beyond the platform ends, the designer shall submit a variance which includes a graphic illustrating the clearance check for KCMO approval.

If platforms must be located on curved track, the designer is required to perform a detailed investigation of clearances and possible hazardous conditions, with consideration given to methods for keeping patrons clear of the streetcar's dynamic envelope overhang when entering and leaving the stop.

Deleted: *DRAFT*

Deleted: *Downtown*

For all tangent streetcar stops, the offset from centerline of track to edge of platform will be the half vehicle width plus 2 inches. All stops will maintain a minimum of 2 inches between the platform and the vehicle static envelope. When the vehicle is at a stop, a maximum horizontal gap of 3 inches will be provided at the low floor center doors in order to comply with both Federal Transit Administration (FTA) and ADA guidelines.

2.1.1.2 Curved Alignment

Intersections of horizontal tangents shall be connected by circular curves which may be either simple curves or spiraled curves as required by these criteria.

Circular Curves

The desired minimum radius for mainline track shall be the minimum radius that is required to achieve the maximum civil speed for the allowable equilibrium superelevation and corridor constraints. Degree of curvature, where required for calculation purposes, shall be defined by the arc definition of curvature as determined by the following formula:

$$D_A = 5729.58 / R \text{ (in feet)}$$

The design speed for a given horizontal curve shall be based on its radius, length of spiral transition, and actual and unbalanced superelevation through the curve as described in the following sections. A maximum unbalance of 6 inches should be used for all design calculations of vehicle speeds, spiral lengths, etc. (9 inches of unbalance may be considered for operating speeds if authorized by KCMO and verified with rider-comfort tests).

Circular Curves	Condition	Curve Radius
	Desirable	82.02 feet (25 meters)
	Absolute Minimum	65.62 feet (20 meters)

Superelevation

Superelevation is defined as the difference in inches that the outer (high) rail is raised above the inner (low) rail. Equilibrium superelevation is the amount of superelevation that would be required so that the resultant force from the center of gravity of the streetcar vehicle will be perpendicular to the plane of the two rails and halfway in between them at a given speed. Equilibrium superelevation shall be determined by the following equation:

$$E_q = E_a + E_u = 3.96\left(\frac{V^2}{R}\right)$$

Where:

E_q = Equilibrium super-elevation, in inches

E_a = actual super-elevation, in inches

E_u = unbalanced super-elevation, in inches

Deleted: *DRAFT*
Deleted: *Downtown*

V = design speed through the curve, in mph

R = radius of curvature, in feet

Calculated values for actual superelevation shall be rounded to the nearest ¼-inch. For a total superelevation (E_a + E_u) of 1 inch or less, no actual super-elevation (E_a) shall be applied. Actual super-elevation (E_a) shall be attained and removed linearly throughout the full length of the spiral transition curve by raising the outside rail while maintaining the inside rail at the profile grade.

The maximum values for actual and unbalanced super-elevation shall be as follows:

Non-Exclusive/Mixed Traffic Track

Super-elevation		Maximum Value
E_a	=	0 inch; Desirable, 1 inch: max (~2%)
E_u	=	6 inch; Desirable 9 inch; Absolute *

Exclusive and Semi-Exclusive Track

Super-elevation		Maximum Value
E_a	=	4 inches; Desirable 6 inches; Absolute
E_u	=	6 inches; Desirable 9 inches; Absolute *

* Higher value per KCMO approval during ride-along testing.

When superelevation is applied, it shall be in accordance with the following requirements:

- When the calculated E_a is less than ½ inch, zero shall be used. When it is ½ inch or greater, but not more than 1 inch, 1 inch shall be used.
- When Zero E_a is used, the value of E_u shall not exceed 9 inches.

For street running track, actual (Ea) superelevation is not typical or desired. However, in extreme cases where a 0% cross slope cannot be obtained between the rails design can consider adding super elevation/cross slope to accommodate the existing street sections, cross traffic and/or reassure positive drainage toward storm drain inlets.

2.1.1.3 Spiral Curves

Spirals will be used where feasible and practical. Spiral curves are preferred over simple curves. Due to typical alignment constraints it is recommended that the minimum spiral length be used.

Deleted: *DRAFT*

Deleted: *Downtown*

Spirals	Condition	Spiral Length
	Absolute Minimum	25 feet; assuming no super elevation

Spiral transition curves shall be used in order to develop the super-elevation of the track and limit lateral acceleration during the horizontal transition of the streetcar vehicle as it enters the curve. Spiral transition curves shall be clothoid spirals. See Figure 2.5 (at the end of this chapter) for curve and spiral nomenclature.

The desirable lengths of spiral shall be the greater of the lengths determined from the following formulae:

$$L_s = 1.03VE_a$$

$$L_s = 0.82VE_u \ (L_s = 0.29VE_u \text{ for Design Speeds} \leq 30 \text{ MPH})$$

Deleted: 1.09

$$L_s = 31E_a$$

Where:

L_s = spiral length, in feet
V = curve design speed, in mph
E_a = actual super-elevation, in inches
E_u = unbalanced super-elevation, in inches

Where compound curves are used, the minimum length of connecting transition spiral (in feet) shall be the largest length as determined from the following formula:

$$L_s = 1.03V(E_{a1} - E_{a2})$$

$$L_s = 1.09V(E_{u1} - E_{u2})$$

Spirals are not required when the calculated Ls<0.01R (where R is the radius of the curve).

2.1.1.4 Reverse Curves

Reverse curves shall be avoided on mainline track, if possible. Every attempt shall be made to use standard circular curves with tangent sections as described in Section 2.1.1.2. For those sections where reverse curves must be used, the following criteria may be used with prior approval from KCMO.

- Reverse curves shall have spiral transition curves that meet at the point of reverse curvature, with the rate of change of super-elevation constant through both of the spiral curves. Spirals shall be considered back-to-back for construction where the designed tangent between two reversing curves is less than three feet.
- The super-elevation transition through the spirals shall be accomplished by sloping both rails through the entire transition, as shown in Figure 2.6 at the end of this chapter.

Deleted: *DRAFT*

Deleted: *Downtown*

2.1.2 Vertical Alignment

The vertical track alignment shall be composed of constant grade tangent segments connected at their intersection by parabolic curves having a constant rate of change in grade. The profile grade line in tangent track shall be along the centerline of track between the two running rails and in the plane defined by the top of the two rails. In curved track, the inside rail of the curve shall remain at the profile grade line and super-elevation achieved by raising the outer rail above the inner rail.

2.1.2.1 Vertical Tangents

The minimum length of constant profile grade between vertical curves shall be as follows:

Between Curves	Condition	Tangent Length
	Absolute Minimum	0 ft
Special Trackwork	Condition	Tangent Length
	Absolute Minimum	10 ft
Stop Platform	Condition	Tangent Length
	Absolute Minimum	5 feet beyond the front and rear axles when vehicle is in the stop position at the platform

All **special trackwork** shall be located on tangent grade and the associated points of switches/frog heels shall be located a minimum distance of 10 feet from the point of vertical curvature.

At streetcar stop **platforms**, the vertical alignment shall be tangent throughout the entire length of the platform. The tangent grade shall extend an absolute minimum distance of 5 feet beyond both the front and rear vehicle axles when the vehicle is stopped at the platform. If platforms are located on curved track, the designer is required to perform a detailed investigation of clearances and possible hazardous conditions, with consideration being given to methods of keeping the height of the stop platform a reasonable distance below or above the height of the streetcar door. Stop indicators for the streetcar at the stop platform must be shown on civil plans.

Deleted: *DRAFT*
Deleted: *Downtown*

2.1.2.2 Vertical Grades

The following profile grade limitations shall apply:

Mainline Track in Mixed-Traffic Lanes on City Streets

When the track occupies the travel lane or adjacent parking lane, the vertical profile should match the roadway profile and associated crown to the extent reasonable and practical without exceeding the project design criteria. When setting initial profiles in roadway areas an assessment shall be made of the amount of adjacent roadway pavement that may need to be reconstructed due to requisite utility relocations. When such areas are considered, it may be both practical and cost-efficient to further optimize the track profile by making minor pavement contour adjustments within the areas of pavement replacement already occurring due to utility work.

Mainline Tracks

Desired Maximum	7.0%
*Variance threshold (short sustained grade with no more than 2500 feet between points of vertical intersection (PVI's) of vertical curves)	7.5%
Absolute Maximum (short sustained grade with no more than 500 feet between points of vertical intersection (PVI's) of vertical curves)	9.0%
**Desired Minimum (for drainage)	0.5%

* Variance Threshold is not to be exceeded without KCMO approval.

** Desired Minimum is not to be exceeded without KCMO approval.

Stop Area

Minimum	0.5%
*Maximum	2.0% (or match existing street grade)

* Platform longitudinal grade will match existing street grade. However, any grade in excess of 2.0% will require KCMO approval via a variance submittal.

2.1.2.3 Vertical Curves

All changes in grade shall be connected by vertical curves. Vertical curves shall be defined by parabolic curves having a constant rate of change in grade.

Vertical Curve Lengths

The minimum length of vertical curves shall be determined as follows:

Crest curves: $$LVC = \frac{AV^2}{25}$$

Deleted: *DRAFT*

Deleted: *Downtown*

Sag curves: $$LVC = \frac{AV^2}{45}$$

Where:

LVC = length of vertical curve, in feet

A = $(G_2 - G_1)$ = algebraic difference in gradients connected by the vertical curve, in percent

G_1 = percent grade of approaching tangent

G_2 = percent grade of departing tangent

V = design speed, in mph

The rate of change (K value) for vertical curves should not be less than 11.5 for sag curves and 8.2 for crest curves, where K = LVC/A. The minimum "K Values" must be verified and should be adjusted to the vehicle manufacturer's actual K values once the vehicle is selected. Actual values should be documented and submitted as a design criteria revision request for KCMO approval.

If a vertical curve with a K value less than 16.4 is combined with a horizontal curve with a radius less than 95 feet, the designer shall consult the vehicle manufacturer to ensure that the vehicle can negotiate the proposed geometry.

2.1.3 Special Trackwork

In general, special trackwork shall be located on track segments that are tangent both horizontally and vertically, including tangent segments in advance of points of switches. For alignment requirements through special trackwork areas, refer to Section 2.3.2, Trackwork.

2.2 Clearance Requirements

2.2.1 General

This section establishes the minimum dimensions required to assure proper clearances between the streetcar vehicles or transit structures and wayside obstructions involved.

2.2.1.1 Vehicle Dynamic Envelope

Vehicle Description
The vehicle presently running on the KCMO streetcar system is the CAF Urbos 3 Low Floor Streetcar Vehicle. This is the design vehicle used to establish vehicle dimensions and operational characteristics.

Static Outline
The static dimensions of the CAF Urbos 3 Low Floor Streetcar Vehicle are as shown in Figure 2.2.1.1a below.

Deleted: *DRAFT*

Deleted: *Downtown*

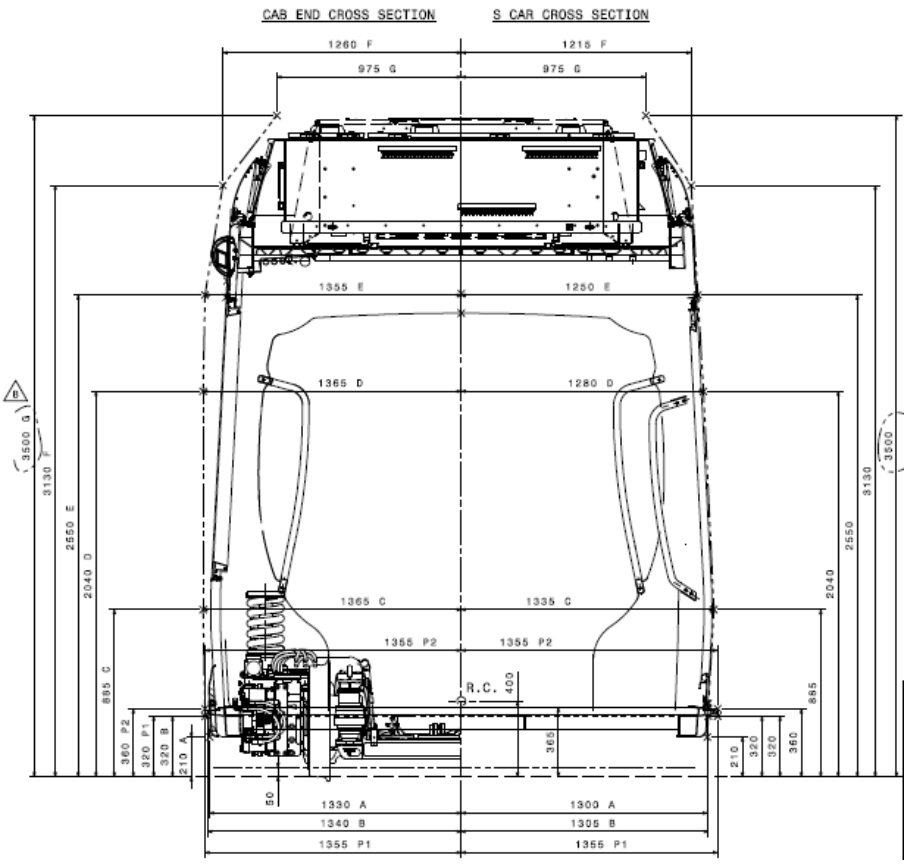

Figure 2.2.1.1a – Static Outline

Dynamic Outline

The dynamic outline of the CAF Urbos 3 Low Floor Streetcar Vehicle includes the anticipated dynamic movement of the vehicle during operation and factors to account for wear of both vehicle and track components during the life of the system. The major factors which affect the dynamic outline consist of the following:

- Lateral roll of the vehicle
- Primary and secondary suspension failure
- Vehicle body yaw
- Lateral play in the wheels

Deleted: *DRAFT*

Deleted: *Downtown*

- Rail wear and wheel flange wear
- Vehicle manufacturer's tolerances

The actual extents to which these factors affect the total dynamic envelope are only approximate.

See Figure 2.2.1.1a and Table 2.2.1.1b for the CAF Urbos 3 Low Floor Streetcar Vehicle dynamic envelope.

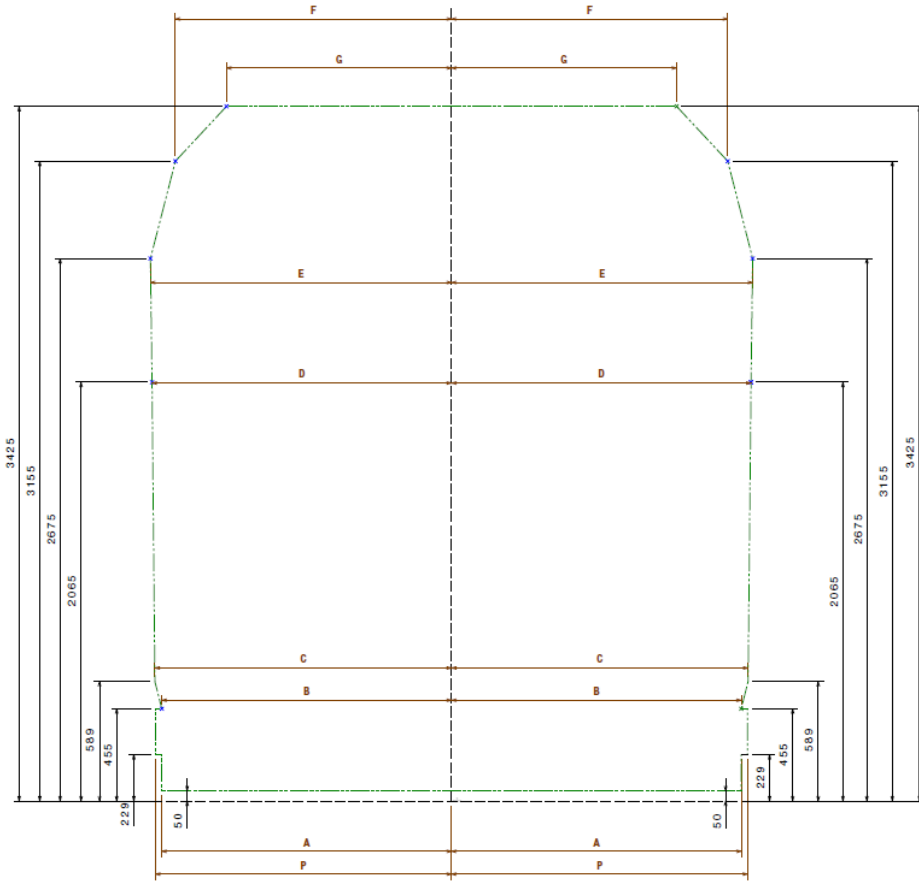

Figure 2.2.1.1a – Dynamic Outline

Deleted: *DRAFT*

Deleted: *Downtown*

2.2.1.2 Track Curvature and Superelevation Adjustment

When a streetcar vehicle enters a horizontal curve, including turnouts, the dynamic outline must be adjusted for overhang at the end of the vehicle and for middle ordinate shift (belly-in) midway between the trucks (bogies) of the vehicles. The presence of superelevation shall increase the middle ordinate shift particularly toward the top of the vehicle. See vehicle dynamic envelope tables in the Table 2.2.1.1b below.

Deleted: *DRAFT*

Deleted: *Downtown*

		DYNAMIC ENVELOPE OUTER SIDE (Non compensated lateral acceleration 1m/s2)												
R	*20*	*25*	*30*	*40*	*50*	*70*	*90*	*100*	*200*	*300*	*500*	*1000*	*2000*	*STR*
A	1880	1764	1685	1586	1526	1505	1491	1486	1462	1455	1444	1435	1433	1419
B	1887	1771	1692	1593	1533	1512	1498	1492	1489	1462	1451	1442	1439	1428
P	1901	1785	1706	1607	1547	1526	1512	1506	1482	1476	1465	1455	1453	1442
C	1924	1807	1729	1630	1570	1549	1534	1529	1505	1499	1488	1478	1476	1456
D	1960	1844	1765	1666	1606	1585	1571	1565	1542	1535	1524	1515	1512	1469
E	1967	1851	1772	1673	1613	1592	1578	1572	1549	1542	1531	1522	1519	1465
F	1892	1776	1697	1598	1538	1517	1503	1497	1474	1467	1456	1446	1444	1378
G	1620	1504	1425	1326	1266	1245	1231	1225	1202	1195	1184	1175	1172	1099
		DYNAMIC ENVELOPE INNER SIDE (Standing at a cant 0 mm)												
R	*20*	*25*	*30*	*40*	*50*	*70*	*90*	*100*	*200*	*300*	*500*	*1000*	*2000*	*STR*
A	1765	1691	1643	1582	1546	1503	1476	1469	1428	1428	1426	1424	1425	1419
B	1769	1695	1647	1586	1550	1508	1482	1473	1432	1437	1435	1433	1434	1428
P	1819	1745	1696	1636	1600	1557	1532	1523	1482	1469	1455	1448	1449	1442
C	1803	1729	1680	1620	1583	1541	1516	1507	1466	1465	1464	1461	1463	1456
D	1760	1686	1637	1577	1540	1498	1473	1464	1472	1477	1475	1473	1474	1469
E	1736	1662	1614	1553	1517	1474	1454	1456	1468	1473	1471	1469	1470	1465
F	1709	1635	1586	1526	1489	1447	1422	1413	1380	1385	1383	1381	1382	1378
G	1474	1400	1351	1291	1254	1212	1187	1178	1137	1124	1110	1101	1102	1099

		DYNAMIC ENVELOPE OUTER SIDE (Non compensated lateral acceleration 1m/s2)												
R	*20*	*25*	*30*	*40*	*50*	*70*	*90*	*100*	*200*	*300*	*500*	*1000*	*2000*	*STR*
A	1880	1764	1685	1586	1526	1505	1491	1486	1462	1455	1444	1435	1433	1419
B	1887	1771	1692	1593	1533	1512	1498	1492	1489	1462	1451	1442	1439	1428
P	1901	1785	1706	1607	1547	1526	1512	1506	1482	1476	1465	1455	1453	1442
C	1924	1807	1729	1630	1570	1549	1534	1529	1505	1499	1488	1478	1476	1456
D	1960	1844	1765	1666	1606	1585	1571	1565	1542	1535	1524	1515	1512	1469
E	1967	1851	1772	1673	1613	1592	1578	1572	1549	1542	1531	1522	1519	1465
F	1892	1776	1697	1598	1538	1517	1503	1497	1474	1467	1456	1446	1444	1378
G	1620	1504	1425	1326	1266	1245	1231	1225	1202	1195	1184	1175	1172	1099
		DYNAMIC ENVELOPE INNER SIDE (Standing at a cant 15 mm)												
R	*20*	*25*	*30*	*40*	*50*	*70*	*90*	*100*	*200*	*300*	*500*	*1000*	*2000*	*STR*
A	1765	1692	1643	1582	1546	1504	1479	1470	1429	1428	1427	1424	1426	1419
B	1769	1696	1647	1586	1550	1508	1482	1473	1433	1437	1435	1433	1434	1428
P	1819	1745	1696	1636	1600	1557	1532	1523	1482	1469	1455	1448	1449	1442
C	1804	1730	1681	1621	1584	1542	1517	1509	1487	1466	1465	1462	1464	1456
D	1763	1689	1641	1580	1544	1501	1476	1467	1475	1480	1479	1476	1478	1469
E	1740	1667	1618	1557	1521	1479	1459	1461	1472	1477	1475	1473	1474	1465
F	1714	1640	1592	1531	1495	1453	1427	1418	1385	1390	1389	1386	1388	1378
G	1480	1406	1358	1297	1261	1218	1193	1184	1143	1131	1116	1107	1108	1099

		DYNAMIC ENVELOPE OUTER SIDE (Non compensated lateral acceleration 1m/s2)												
R	*20*	*25*	*30*	*40*	*50*	*70*	*90*	*100*	*200*	*300*	*500*	*1000*	*2000*	*STR*
A	1880	1764	1685	1586	1526	1505	1491	1486	1462	1455	1444	1435	1433	1419
B	1897	1771	1692	1593	1533	1512	1498	1492	1489	1462	1451	1442	1439	1428
P	1901	1785	1706	1607	1547	1526	1512	1506	1482	1476	1465	1455	1453	1442
C	1924	1807	1729	1630	1570	1549	1534	1529	1505	1499	1488	1478	1476	1456
D	1960	1844	1765	1666	1606	1585	1571	1565	1542	1535	1524	1515	1512	1469
E	1967	1851	1772	1673	1613	1592	1578	1572	1549	1542	1531	1522	1519	1465
F	1892	1776	1697	1598	1538	1517	1503	1497	1474	1467	1456	1446	1444	1378
G	1620	1504	1425	1326	1266	1245	1231	1225	1202	1195	1184	1175	1172	1099
		DYNAMIC ENVELOPE INNER SIDE (Standing at a cant 30 mm)												
R	*20*	*25*	*30*	*40*	*50*	*70*	*90*	*100*	*200*	*300*	*500*	*1000*	*2000*	*STR*
A	1766	1692	1643	1583	1547	1504	1479	1470	1429	1429	1427	1425	1428	1419
B	1769	1696	1647	1586	1550	1508	1483	1474	1433	1437	1436	1433	1435	1428
P	1819	1745	1697	1636	1600	1557	1532	1523	1482	1470	1455	1448	1449	1442
C	1805	1731	1682	1622	1585	1543	1518	1509	1488	1467	1466	1463	1465	1456
D	1766	1693	1644	1583	1547	1505	1479	1470	1478	1483	1482	1479	1481	1469
E	1745	1671	1622	1562	1525	1483	1462	1465	1476	1481	1480	1477	1479	1465
F	1720	1646	1597	1537	1500	1458	1433	1424	1391	1396	1394	1392	1393	1378
G	1486	1413	1364	1303	1267	1225	1199	1190	1149	1137	1122	1113	1115	1099

Table 2.2.1.1b – Dynamic Outline Tables

Deleted: *DRAFT*

Deleted: *Downtown*

		DYNAMIC ENVELOPE OUTER SIDE (Non compensated lateral acceleration 1m/s2)												
R	*20*	*25*	*30*	*40*	*50*	*70*	*90*	*100*	*200*	*300*	*500*	*1000*	*2000*	*STR*
A	1880	1764	1685	1586	1526	1505	1491	1486	1462	1455	1444	1435	1433	1419
B	1887	1771	1692	1593	1533	1512	1498	1492	1469	1462	1451	1442	1439	1428
P	1901	1785	1706	1607	1547	1526	1512	1506	1482	1476	1465	1455	1453	1442
C	1924	1807	1729	1630	1570	1549	1534	1529	1505	1499	1488	1478	1476	1456
D	1960	1844	1765	1666	1606	1585	1571	1565	1542	1535	1524	1515	1512	1469
E	1967	1851	1772	1673	1613	1592	1578	1572	1549	1542	1531	1522	1519	1465
F	1892	1776	1697	1598	1538	1517	1503	1497	1474	1467	1456	1446	1444	1378
G	1620	1504	1425	1326	1266	1245	1231	1225	1202	1195	1184	1175	1172	1099
		DYNAMIC ENVELOPE INNER SIDE (Standing at a cant 7,5 mm)												
R	*20*	*25*	*30*	*40*	*50*	*70*	*90*	*100*	*200*	*300*	*500*	*1000*	*2000*	*STR*
A	1765	1692	1643	1582	1546	1504	1478	1469	1428	1428	1426	1424	1425	1419
B	1769	1696	1647	1586	1550	1508	1482	1473	1432	1437	1435	1433	1434	1428
P	1819	1745	1696	1636	1600	1557	1532	1523	1482	1469	1455	1448	1449	1442
C	1803	1729	1681	1620	1584	1541	1516	1507	1466	1466	1464	1462	1463	1456
D	1761	1688	1639	1578	1542	1500	1475	1466	1473	1479	1477	1475	1476	1469
E	1738	1665	1616	1555	1519	1477	1456	1459	1470	1475	1473	1471	1472	1465
F	1711	1638	1589	1528	1492	1450	1425	1418	1383	1388	1386	1384	1385	1378
G	1477	1403	1364	1294	1258	1215	1190	1181	1140	1127	1113	1104	1105	1099

		DYNAMIC ENVELOPE OUTER SIDE (Non compensated lateral acceleration 1m/s2)												
R	*20*	*25*	*30*	*40*	*50*	*70*	*90*	*100*	*200*	*300*	*500*	*1000*	*2000*	*STR*
A	1880	1764	1685	1586	1526	1505	1491	1486	1462	1455	1444	1435	1433	1419
B	1887	1771	1692	1593	1533	1512	1498	1492	1469	1462	1451	1442	1439	1428
P	1901	1785	1706	1607	1547	1526	1512	1506	1482	1476	1465	1455	1453	1442
C	1924	1807	1729	1630	1570	1549	1534	1529	1505	1499	1488	1478	1476	1456
D	1960	1844	1765	1666	1606	1585	1571	1565	1542	1535	1524	1515	1512	1469
E	1967	1851	1772	1673	1613	1592	1578	1572	1549	1542	1531	1522	1519	1465
F	1892	1776	1697	1598	1538	1517	1503	1497	1474	1467	1456	1446	1444	1378
G	1620	1504	1425	1326	1266	1245	1231	1225	1202	1195	1184	1175	1172	1099
		DYNAMIC ENVELOPE INNER SIDE (Standing at a cant 22,5 mm)												
R	*20*	*25*	*30*	*40*	*50*	*70*	*90*	*100*	*200*	*300*	*500*	*1000*	*2000*	*STR*
A	1766	1692	1643	1583	1546	1504	1479	1470	1429	1428	1427	1424	1426	1419
B	1769	1696	1647	1586	1550	1508	1483	1474	1433	1437	1435	1433	1434	1428
P	1819	1745	1697	1636	1600	1557	1532	1523	1482	1469	1455	1448	1449	1442
C	1804	1730	1682	1621	1585	1542	1517	1508	1467	1467	1465	1463	1464	1456
D	1765	1691	1642	1582	1545	1503	1478	1469	1477	1482	1480	1478	1479	1469
E	1742	1668	1620	1559	1523	1481	1460	1463	1474	1479	1478	1475	1477	1465
F	1717	1643	1594	1534	1498	1455	1430	1421	1388	1393	1392	1389	1390	1378
G	1483	1409	1361	1300	1264	1221	1196	1187	1146	1134	1119	1110	1111	1099

Table 2.2.1.1b – Dynamic Outline Tables (continued)

Turnouts

When a streetcar vehicle travels through the diverging route of a turnout the dynamic outline shall be affected. During preliminary design, the dynamic outline shall be checked adjacent to, and 23 feet beyond, all curved components (switches, closure rails) of the diverging turnout route in order to determine potential conflicts with adjacent structures, poles, etc.

Horizontal Clearances

All existing and proposed structures, including OCS poles, bridge pier columns, and retaining walls shall clear the total streetcar dynamic outline as defined in Section 2.2.1.1, by a distance equal to or greater than the sum of applicable clearances and tolerances defined in this section.

Clearances shall be checked between the streetcar dynamic outline and all adjacent structures along tangent track and at turnouts a minimum of 23 feet in either direction of the structures.

Deleted: *DRAFT*

Deleted: *Downtown*

This is to verify that an adjacent curved track does not affect the clearance in the adjoining tangent section.

For rigid objects (i.e., retaining wall), design variances for areas that do not conform to design criteria will require KCMO approval.

Adjacent traffic lanes: Only the static envelope will be used for non-rigid objects such as traffic lanes and striping.

Track spacing for Streetcar Exclusive Track

The minimum allowable spacing between two exclusive streetcar mainline tracks, with equal super-elevation and no overhead contact system (OCS) support poles between them, shall be determined from the following formula:

$$d = T_t + T_a$$

Along sections where OCS poles are located between track centerlines, the minimum track spacing shall be determined from the following formula:

$$d = T_t + T_a + 2'' + P$$

Where:

d	=	Minimum allowable spacing between track centerlines, in inches
T_t	=	dynamic half width of vehicle towards curve center, in inches
T_a	=	dynamic half width of vehicle away from curve center, in inches
P	=	Maximum allowable OCS pole diameter (including deflection) of 18.5 inches

Clearance to Obstructions

The distance between any fixed object along the trackway and the centerline of track shall be equal to the design envelope as defined in the formula below:

Design envelope* = (dynamic outline) + (running clearance) +
(construction and maintenance tolerances)

Acoustic treatments shall be considered part of a structure. Allow 3" for acoustic treatment.

Exceptions to the design envelope requirements are listed in Section 2.2.1.3

Running Clearances

The running clearance provides clear passage for a vehicle which has moved to the extreme position within the dynamic outline. Design running clearances for exclusive streetcar track shall be:

Deleted: *DRAFT*
Deleted: *Downtown*

- 4" for poles and structural supports
- 2" for all other permanent structures

Construction Tolerances Along Proposed Structures
A construction tolerance is required when a new structure is constructed adjacent to or above the streetcar. This tolerance is added to the base construction and maintenance tolerance and applies to construction that is part of the streetcar project or future construction. This construction tolerance is provided in the event that the structure, or part thereof, is incorrectly located during construction. These clearances shall be:

- 6" for Soldier Pile and Lagging Walls
- 2" for other proposed structures

Track Construction and Maintenance Tolerances
Track construction and maintenance tolerances account for a combination of factors such as track misalignment, wheel and track gauge tolerances, and wheel and rail wear. These tolerances also include provision for any cross level variances between the track rails due to unintentional construction inaccuracies and possible deference of track maintenance during operation of the system. The following track construction and maintenance tolerances apply:

Direct fixation or embedded track	½ inch
Mainline tie and ballast track	3 inches
Special Trackwork	½ inch
Yard track	3 inches

2.2.1.3 Vehicle Interface at Stop Platforms

At passenger stops, the distance from the centerline of the track to the edge of platform shall be 55.57 inches with a tolerance of plus 0.0 inch and minus 0.375 inch for tangent track.

2.2.1.4 Maintenance and Emergency Evacuation Paths

A minimum clear width of 30 inches shall be provided between the static envelope and any continuous obstruction alongside the track to create a walkway for maintenance personnel and to create a designated passenger emergency evacuation path.

This space shall be provided in revenue service areas with restricted right of way, in areas of retained cut, and on structures. The space should be reasonably level.

2.2.2 Vertical Clearances

Within areas where the streetcar system will draw electric traction power from an overhead contact wire system, the following vertical clearances shall be provided. These clearances are measured from the top of the high rail along any given section of track to the underside of any overhead structure, within the horizontal limits of the clearance envelope:

Non-Exclusive/Mixed Traffic Track	Exclusive/Semi-Exclusive Track

Deleted: *DRAFT*
Deleted: *Downtown*

Desirable Minimum	19 ft - 0 in	15 ft - 0 in
*Absolute Minimum	18 ft - 6 in	13 ft - 4 in

Deleted: **14
Deleted: 0

* Any value less than the Desirable Minimum requires KCMO approval.

Vertical clearances less than the absolute minimum may not be used without specific approval of KCMO.

Deleted: ** To be verified with vehicle manufacturer

Transit structures over public highways shall be in accordance with American Association of State Highway and Transportation Officials (AASHTO) Standard Specifications for Highway Bridges or as modified by KCMO or local jurisdiction, whichever is applicable. Vertical clearances for transit structures over local public streets and roads shall be as required by the authority having jurisdiction over the street or road.

The National Electrical Safety Code (NESC) stipulates minimum distances between the streetcar wire and the rail in various situations. Civil and structural designers shall coordinate their design related to any structures over the tracks to ensure that NESC and other OCS design criteria are met.

2.3 Trackwork

2.3.1 Trackway

Trackway is defined as that portion of the streetcar line which has been prepared to support the track and its appurtenant structures.

2.3.1.1 Embedded Track and Ballasted Track

Embedded track shall be the standard for trackwork constructed where rail vehicles share the trackway with rubber-tired vehicles and/or pedestrians. An 8 foot wide by 12 to 14 inch deep concrete track slab (depending on rail section and geotechnical investigation) shall provide the foundation beneath this form of track construction, as shown in Figure 2.2. Reinforcing steel in the track slab shall be determined by the designer with respect to the geotechnical report and type of rail used. Ballasted track may be used for trackwork where rail vehicles are segregated from rubber-tired vehicles and pedestrians. Both ballasted and embedded track shall be constructed with continuous welded rail (CWR), unless specified otherwise.

Deleted: *DRAFT*

Deleted: *Downtown*

Figure 2.1 – Simple Concrete Track Slab

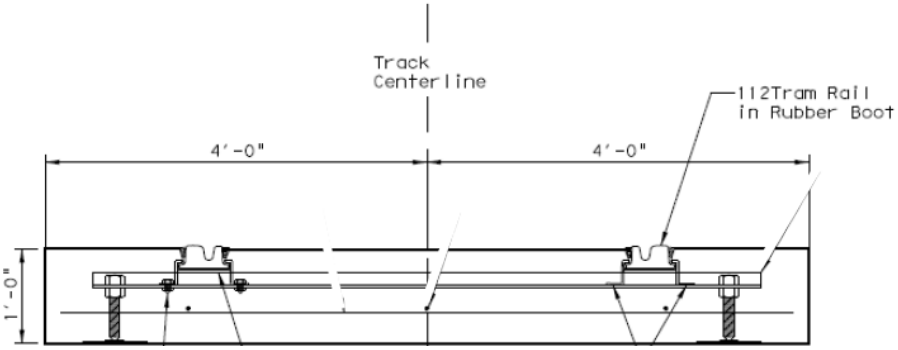

Figure 2.2 – Example Track Slab – Block Rail with Insulating Rubber Boot

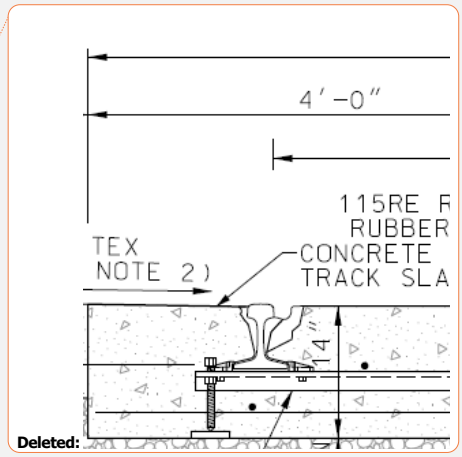

Deleted:

Figure 2.3 – Example Track Slab – 115 RE with Insulating Rubber Boot and Flangeway Former

2.3.1.2 Direct Fixation Track

Direct fixation track shall be designed for anchoring rail fasteners directly into a second pour concrete plinth or pad constructed by either the bottom-up or top-down method. Concrete plinth or pad designs shall include sufficient anchoring to restrain the resultant rail and fastener forces. CWR shall be used on direct fixation track. Special consideration shall be given to the method of fixation of CWR to aerial structures so that rail forces that are transmitted to the structure are not applied in a manner that could damage the structure. A transition structure/slab is typically

Deleted: *DRAFT*

Deleted: *Downtown*

required to accommodate the change in track modulus at the interface between direct fixation and embedded/ballasted track.

The direct fixation rail fasteners shall include the following considerations:

- Type of fasteners: spring clip or threaded fastener
- Spring stiffness for noise and vibration control
- Longitudinal restraint (fastener clip)
- Rail cant
- Type of anchor bolt assembly
- Vertical and lateral adjustment capability
- Electrical resistivity and insulation properties

The design of the concrete plinth or pad shall include the following considerations:

- Plinth or pad dimensions to suit track alignment and to accommodate restraining rail and/or emergency guardrail where required
- Interface connection of plinth or pad with elevated structure deck
- Anchoring to restrain resultant rail forces
- Elevated structure and rail interaction
- Drainage of plinths or pads on elevated structure deck

2.3.1.3 Subgrade and Subballast

The required thickness of either sub-ballast or subbase, if required, should be determined through a structural analysis of the track structure and geotechnical analysis of the engineering characteristics of the subgrade soils. In general the sub-ballast or subbase layer for primary track shall consist of a uniform layer of coarse aggregate that is placed over and follows the profile and cross section of the subgrade and is not less than 6 inches (150 mm) deep.

Sub-ballast is defined as a uniformly graded material that will provide a semi-impervious layer between the ballast and the subgrade. It facilitates drainage by shedding water off to the sides of the trackway, shielding the subgrade from moisture that percolates down through the ballast. Subbase material is used beneath pavement slabs such as those used in embedded track. The required gradation of the subballast layer shall be defined in the specifications.

2.3.1.4 Ballast

No. 4 ballast gradation shall be used on all main ballasted tracks and No. 5 ballast gradation for ballasted yard and secondary track. Ballast gradation number shall be in conformance with the AREMA specifications. (If concrete ties are to be used in yard track, ballast should be No. 4.)

2.3.1.5 A minimum depth of 8 inches of ballast shall be used between the bottom of tie and the top of the sub-ballast (beneath the low running rail in super-elevated track and the inner running rail in tangent track). Ballast must be of sufficient depth to distribute pressure between the tie and subgrade. Ideal tie to ballast bearing pressures are 65 psi for timber ties and 85 psi for concrete ties. The ballast must sustain and transmit static and dynamic loads in three

Deleted: *DRAFT*

Deleted: *Downtown*

directions (transverse, vertical and longitudinal), distributing them uniformly over the subgrade. Slopes on ballasted sections, side slopes of earth shall generally be constructed at 2:1 or flatter. Side slopes of earth steeper than 2:1 may be used in special situations to avoid excessive earthwork or right-of-way costs; however, such slopes shall not be used without a soil engineer's determination of slope stability.

2.3.1.6 Track Drainage

2.3.1.6.1 Ballasted Track Drainage

Ditches, grate drains, and/or underdrains shall be provided at the edges of the track to prevent water from ponding or covering any part of the track structure or contributing to subgrade instability. Minimum ditch grades will be 0.3%. In areas where the right-of-way does not allow use of the standard ditch section, underdrains may be used.

2.3.1.6.2 Embedded Track Drainage

Track drains may be used in embedded track areas located in exclusive and non-exclusive alignments to properly drain the girder rail flangeways and the pavement surface between the rails when deemed necessary. Do not use drain holes to be slotted through the flangeway groove of the grooved rail flangeway. Drains shall also be located at the low points of sag vertical curves unless a suitable alternative drainage method is considered and approved by KCMO. A track drain shall also be located at the track switches and on the downgrade end of all embedded track which adjoins ballasted track or direct fixation track so as to minimize fouling of the track ballast. Track drains shall be electrically isolated from the running rails. Track drain frame and grate shall be designed to meet AASHTO HS-20 loading.

Track drains may be located adjacent to special trackwork to prevent water and dirt from entering such critical areas.

2.3.1.7 Transition Slabs

Transition slabs shall be provided at all transitions between ballasted track and embedded/Direct Fixation track to accommodate the change in track modulus between the two systems.

2.3.2 Trackwork

In addition to the criteria and standards defined in this section, all trackwork shall comply with the minimum standards of the following:

- American Railway Engineering & Maintenance-of-Way Association (AREMA)
- Association of American Railroads (AAR)
- Federal Transit Administration (FTA)
- American Public Transit Association (APTA)
- Union Internationale de Chemins de Fer (UIC; Translation: International Union of Railways) as guidance
- Verband Deutscher Verkehrsunternehmen (VDV; Translation: Union of German Transport Companies) as guidance for any elements of trackwork that are fabricated or constructed in accordance with European transit practices

Deleted: *DRAFT*

Deleted: *Downtown*

2.3.2.1 Track Gauge

Track gauge is the distance between the inner sides of the head of rails measured 5/8 inch below the top of rails. For this project, track gauge shall be a standard gauge of 4 ft 8 ½ in (1435mm).

Tee Rail (Figure 2.7) shall be installed with no cant. When block rail is used, no cant is required.

The track gauge and flangeway dimensions in curved embedded track using grooved rail and curved ballasted track using tee rail and restraining rail shall be established by using TCRP Report 155, Track Design Handbook for Light Rail Transit, Section 4.2.4, Curved Track Gauge Analysis.

2.3.2.2 Track Materials (Primary Track)

2.3.2.2.1 Running Rail

All running rail within embedded track sections shall be either tee rail or grooved rail. All tangent sections of rail, embedded curve sections greater than 400-foot radius, and all yard tracks shall use either tee rail or grooved rail. Embedded rail sections with curves 400-foot radius or less (outside the yard track areas) shall use grooved rail or tee rail with associated guard rail.

When using grooved rail, the designer shall use the following grooved rail section:

- 112 TRAM – Low profile (72mm) block rail (only grooved rail that meets Buy America)

The grooved rail section can be seen at the end of this Chapter, in Figure 2.8

Figure 2.3 – Tee Rail with Concrete Flangeway

Figure 2.4 – Grooved Rail with Steel Flangeway

All grooved rail (domestic block rail) shall be higher strength rail (grade S900/R260). All tee rail shall be standard strength (>300 Brinell) in accordance with current AREMA specifications for steel rail. Pre-curving of grooved rail should be performed in roller straighteners for curve radii below 400 feet (120m). All running rails shall be procured in the longest lengths practical for transportation logistics and then flash butt welded into the longest continuous length feasible for installation. Field welds shall then be used to join the lengths of flash butt welded rail.

2.3.2.2.2 Guarded Track for Tee Rail

Restraining Rails

Deleted: *DRAFT*

Deleted: *Downtown*

When using tee rail section along curves on revenue track, restraining rails or strap guard shall be provided on sharp horizontal curvatures to reduce the possibility of derailments attributable to the leading outside wheel climbing the outside rail, and to reduce rail wear on the gauge side of the outer rail. Track with centerline curvature less than 400 feet shall have restraining rail added to the inside running rail. Track having a centerline radius less than or equal to 100 feet shall have both running rails guarded except that seldom-used tracks may be guarded on the low rail only. The flangeway width for each curve shall be determined using the gauge determination analysis specified in Section 4.2.4 of the TCRP Report 155.

The working face of restraining rail that is mounted on the inside rail of curves with radii less than 100 feet shall be vertically planed to an angle that approximates the angle of attack of the wheel flange. Restraining rails that are mounted on outer running rails and on curves that have greater radii may be used with their heads in the as-rolled shape.

The restraining rail shall extend beyond the curve onto tangent track on each end of the curve a minimum distance of 10 feet except that where the curve is spiraled, the restraining rail may end at the spiral-to-tangent point provided that point is at least 10 feet beyond the point on the spiral where the instantaneous radius is equal to 400 feet.

The flared flangeway area at the end of a segment of restraining rail shall not be counted as an effective segment of restraining rail in the determination of the requisite overall length of restraining rail to be used. Flared portions of the restraining rail flangeway shall be at least as long in inches as the allowable track speed in mph with a minimum flare length of 12 inches.

2.3.2.2.3 Emergency Guard Rails

Emergency guard rails shall be installed on track adjacent to all bridges, retained fills and their approaches that may cause extensive damage to a car and/or its passengers in the event of a derailment. Emergency guard rails shall begin 60 feet prior to the major structure and shall provide a 10 inch gap between the rail heads. Material for emergency guard rail shall be 80lb to 115lb second-hand rail.

On single track structures or for a single track located on retained fill, guardrail shall be installed adjoining both running rails. For double track, one guardrail is required for each track and it shall be located inside the running rail which is farthest from the edge of the structure.

2.3.2.2.4 Ballasted Track Special Trackwork

The term “special trackwork” designates the trackwork units necessary where tracks converge, diverge or cross one another. Special trackwork typically includes, but is not limited to, turnouts, crossings and crossovers. All ballasted special trackwork design shall be based on AREMA standards except as modified to meet special conditions. All joints shall be welded.

All special trackwork shall be located on constant profile grades and in tangent sections of track only. There shall be no superelevation in any special trackwork units.

In general, turnouts shall be the flattest possible for a given location that is consistent with the desired track speed. As shown in Table 2.1 (in section 2.3.2.2.5), where turnouts occur in ballasted track, the following desirable minimum and absolute minimum criteria shall apply:

- The yard tracks and main line tracks shall use #4 or 82-foot (25 m) turnouts.

Deleted: *DRAFT*
Deleted: *Downtown*

- Tee rail switches shall be of the uniform riser design per AREMA and shall employ the AREMA detail 5100 undercut "Samson" switch point detail modified to lower the running surface of the stock rail opposite the point. This modification is necessary to assure that wheels with worn flanges are intercepted and properly directed by the switch point. Flanges which have worn short can climb a 5100 detail used without the stock rail modification. All switch heel joints shall be of the floating heel block design except the yard tracks' No. 5 switch heel joints.
- Where a pair of crossovers is required, they should be set as two single crossovers if at all possible. If this is not possible, a double crossover may be used with the approval of KCMO.
- Number 4 AREMA style turnouts will be used in the Vehicle Maintenance Facility (VMF) yard. Turnouts can be installed in ballasted track or installed on a concrete slab with direct fixation (DF). To avoid costly isolation measures, infill concrete is not required for turnouts installed with direct fixation on a slab. The rail will be exposed and isolated from the ground with the DF plates.
- The rail section leading up to the VMF will be 80 to 115lb CWR tee rail. Number 5 ballast, a walkable ballast specifically designed for use in maintenance facilities, and No. 4 tee rail turnouts will be used for the VMF.
- See also Section 2.1.1.1, Horizontal Tangents, for desired locations of points of switches.

Deleted: and Storage
Deleted: MSF
Deleted: MSF
Deleted: MSF

2.3.2.2.5 Embedded Track Special Trackwork

In general, turnouts and crossovers in embedded track for streetcar operation vary in design and sizes from conventional railroad design. Generally, embedded track special trackwork units will be encapsulated with an isolative coating and installed directly in concrete. If grooved rail is used, special trackwork designs should conform to European design standards. All turnouts will be standard European double-tongue switch style and use 82-foot (25 m) radius switches and monoblock frogs. All joints shall be welded. Additionally:

Deleted: (not currently available domestically)

- Whenever possible, embedded track turnouts shall be located so that switch machines are not located in areas of shared use with vehicular traffic so as to enhance the safety of maintenance technicians.
- Whenever possible, embedded special trackwork shall be positioned so that switches, frogs and crossing diamonds are not located in pedestrian paths so as to enhance the safety of both pedestrians and small-wheeled vehicles (e.g., wheelchairs) crossing the tracks.
- As all special trackwork can be a source of noise and ground borne vibration, its proposed location shall be determined with due consideration given to those factors.

Table 2.1 – Turnout Speed Table

TURNOUT RADIUS OR NUMBER	MAX SPEED* (U=3")	NORMAL SPEED* (U=1 1/2")	Description

Deleted: *DRAFT*
Deleted: *Downtown*

82-Foot Radius (25 m)	5	5	
No. 4	8	5	AREMA
No. 5	12	5	AREMA
No. 6	15	10	AREMA
No. 8	20	15	AREMA
No. 10	24	20	AREMA
No. 20	50	45	AREMA

*NOTE: Speeds are in miles per hour (mph)

Special drainage provisions shall be made in embedded track turnouts to preclude standing water in flangeways, tongue areas, and in switch-throwing mechanisms.

2.3.2.2.6 Frogs and Crossing Diamonds

Turnout and crossing diamond frogs shall be designed to accommodate the narrow tread streetcar wheel and hence shall be configured for flange bearing use. On curved streetcar crossing diamonds, consideration shall be given to making the outer rail of the crossing diamond fully flange-bearing and the portions along the inner rail tread-bearing so as to take advantage of the steering effects of the different rolling radii of the flange tip versus the tread. All joints shall be welded.

2.3.2.2.7 Rail Fastenings, Rail Seats and Concrete Ties

Running rail shall be fastened to its support in each type of track construction in a manner dependent upon the type of track construction and rail electrical insulation. All rail fastenings shall be in accordance with the current and applicable AREMA specifications.

Embedded rails shall be secured in place by the use of tie bars/clamp style rail clips assembly and/or anchor plates/clamp style rail clips assembly and elastomeric embedment material. Elastomeric material shall be pre-formed rubber boot. Rail embedment fixation and insulation details shall be developed during the design process.

Concrete ties shall be used on ballasted track sections along the mainline and yard tracks. Concrete ties shall consist of pre-stressed monoblock concrete tie designed in accordance with AREMA, Manual for Railway Engineering, Chapter 10 – Concrete Ties and current ACI 318 Design Procedures. In addition to inserts for running rail elastic rail clips, concrete ties shall be designed with anchorage points for restraining rail and/or emergency guardrail as may be required. Rail seat areas shall be canted at 1:40. The elastic rail clip shall be a Pandrol Fastclip, Pandrol safelock clip, or approved equal.

2.3.2.2.8 Compromise Rail and Rail Joints

Compromise rails shall be used to make the transition from grooved rail section to tee rail section or between rail profiles. Compromise rail shall be fabricated from high strength steel. All joints shall be welded.

Deleted: *DRAFT*

Deleted: *Downtown*

Rail joints shall not be used except in those locations where it is absolutely necessary and only with the approval of KCMO.

All rail ends at rail joints shall be beveled and end-hardened. All joint bars shall be of the 36 inch, six-hole type conforming to the current AREMA specifications. High-strength track bolts shall be used in all rail joints except where expansion and contraction of rail must be allowed for structural and safety reasons.

2.3.2.2.9 Switch Machines

Switch machines shall comply with the following as with Chapter 11, Streetcar Signaling and Route Control, of this manual. Additionally,

- Power switch machines shall provide both point detection and manual operation override in the event of power or communication failure.
- Hand throw / manual switch machines shall generally be of the spring/toggle type and will not normally require point detection or point locking.
- Power switch machine earthbox for embedded turnout switches shall be designed to be installed between switch rails (in-board) and to be anchored on infill concrete inside the special trackwork insulated concrete bathtub. Earthboxes shall be designed to drain into the existing storm drain system.

The switch mechanism for mainline turnouts will be determined based on frequency of use, operational considerations and cost. In instances where manual switch machines are selected for mainline turnouts, spring loaded switch points will be used for all trailing turnouts so that it will not be required to hand throw the switch. The typical turnback movement on the mainline will operate as follows:

Deleted: To be consistent with a low cost approach, all

Deleted: turnouts will be manual and spring

Normal direction of turnout

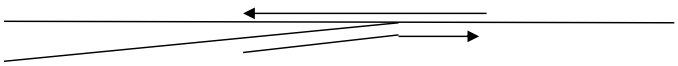

Wheel flange of vehicle forces switch points to open, spring mechanism resets the switch back to the normal position.

The yard switch system shall consist of two embedded switches, and the remainder to be open switches attached to concrete recess.

2.3.2.2.10 At-Grade Crossings (tee rail, ballasted section only outside of yard)

The design of at-grade crossings of primary track shall be based upon the use of precast concrete panels on cross tie or pre-cast full depth modular concrete panel on compacted subballast, or embedded track concepts. Running rail through the crossing area shall be welded and electrically insulated. The design of at-grade crossings of yard tracks shall be based upon the use of asphalt, concrete, rubber, or bolted timber panels.

Deleted: *DRAFT*

Deleted: *Downtown*

2.3.2.2.11 Embedded Track

Trackwork located in streets shall use grooved rails or tee rails encased in a concrete slab. Selection of running rail section and/or limits will be developed during the design process to suit site specific situations.

Existing street pavement will be cut and trenched to sufficient width and depth to allow construction of track slab and special trackwork areas.

After the track has been installed, the specified pavement section will be applied to conform to the required street cross section.

Particular attention shall be directed toward proper drainage of tracks. The adjacent surface pavement shall be designed so surface water will drain away from the track. Track drains shall be used to prevent water from standing. In areas of special trackwork, particular attention will be directed to provide drainage for the special trackwork units, earthboxes, and switch-throwing mechanisms. When possible, track drains shall be located in tangent track.

An elastic rubber material (boot) shall be placed between the rails and pavement materials to electrically insulate the rail and in order to prevent damage to the pavement materials. The pavement material shall be set ¼ inch below the top of rail on the field side to prevent the wheel tread from damaging the pavement material.

2.3.2.2.12 Insulated Joint Bars

Insulated joint bars shall be provided wherever required for proper operation of the signaling system, or where required to isolate one section of track from the traction power negative return circuit. The signaling system shall include impedance bonds to provide a continuous path for traction negative power return current.

Insulated joint bars of epoxy bonded type shall be used in CWR wherever it is necessary to electrically isolate contiguous rail from each other in order to comply with track signaling or traction power criteria. Track bolts shall be equipped with self locking nuts wherever insulated joint bars are required in track constructed with jointed rail or where insulated joints are required in a running rail equipped with restraining rail. They shall be either polyurethane encapsulated or bolted insulated joints.

2.3.2.2.13 Bonded Joint Bars

Except in those tracks designated as being constructed with jointed rail, bolted joints shall only be used between welded rail strings of different chemical composition or metallurgy. These joints shall be of the epoxy bonded type and shall be fastened with high strength bolts. Such joints shall be electrically bonded to provide a continuous path for traction power negative return current and signal circuits. They shall comply with following parameters:

- Identical drilling pattern as standard joint bar
- Compatible with the standard direct fixation rail fasteners
- Comply with the general requirements of a rail joint as defined by the AREMA Manual for Railway Engineering

Deleted: *DRAFT*

Deleted: *Downtown*

2.3.2.2.14 Rail Lubricators

Automatic train-sensing rail lubricators shall be considered for any trackwork with horizontal curve of 500 feet radius or less. In some cases, rail lubricators have reduced significant noise caused by rail transit. Each curve will be evaluated on a case by case basis.

Deleted: *DRAFT*

Deleted: *Downtown*

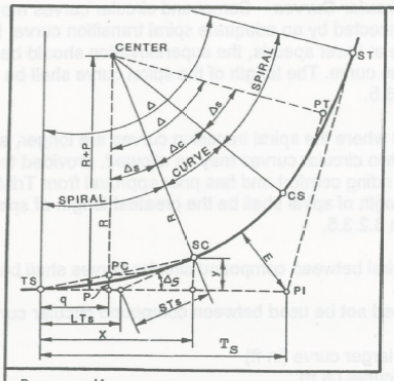

R = radius
D = degree of curvature
P = offset of the PC/PT of simple curve, measured from main tangent of spiral
q = distance from TS/ST to the PC/PT of simple curve, measured along main tangent of spiral
X = distance from TS/ST to the SC/CS, measured along main tangent of spiral
y = offset of SC/CS, measured from main tangent of spiral
E = external distance
L_s = length of spiral arc (limiting value of l)
l = length of spiral arc from Δ_s to any point on spiral
LT_s = long tangent of spiral
ST_s = short tangent of spiral
T_s = total tangent distance TS/ST to PI
Δ = total central angle
Δ_s = total spiral central angle
Δ_c = simple curve central angle
i = deflection at Δ_s from tangent to any spiral point

$$\Delta = \frac{DL_s}{200}$$

$$i = \frac{\Delta_s}{3}$$

$$s = \frac{Dl^2}{200L_s}$$

$$X = l \cos i$$

$$y = \frac{D(rad)L_s^2}{600}$$

$$q = X - R \sin \Delta_s$$

$$P = y - R \, vers \, \Delta_s$$

$$(vers \, \Delta_s = 1 - \cos \Delta_s)$$

$$T_s = (R + P) \tan \frac{\Delta}{2} + q$$

$$E = (R + P) \, ex \sec \frac{\Delta}{2} + P$$

$$LT_s = X - (y / \tan \Delta_s)$$

$$ST_s = y / \sin \Delta_s$$

$$T_c = R \tan \frac{\Delta_c}{2}$$

$$L_c = \frac{100 \, \Delta_c}{D}$$

Figure 2.5 - Curve and Spiral Nomenclature

Deleted: *DRAFT*

Deleted: *Downtown*

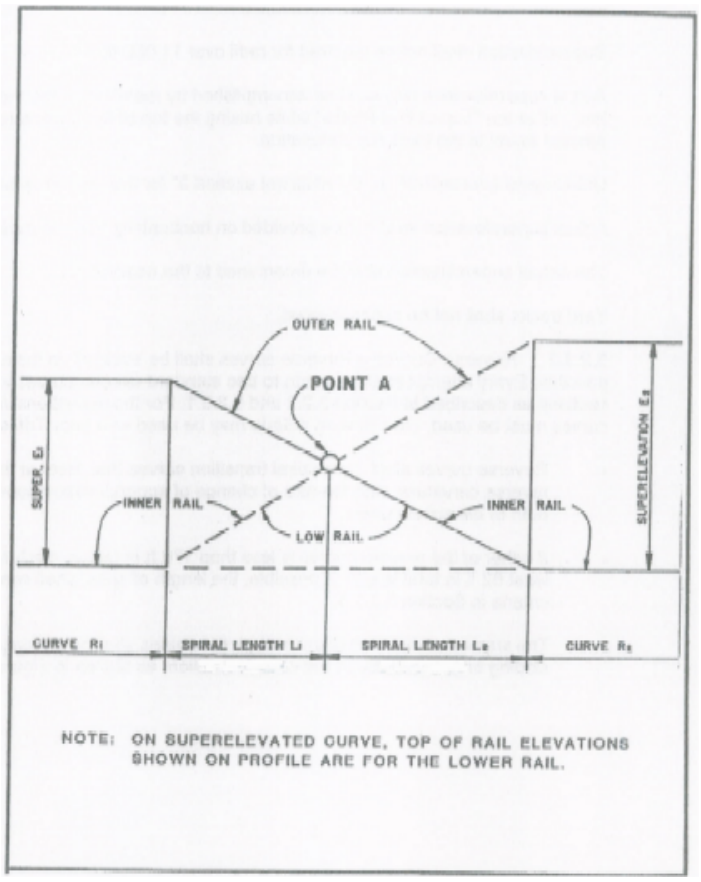

Figure 2.6 – Reverse Curve Super Elevation Transition

Deleted: *DRAFT*

Deleted: *Downtown*

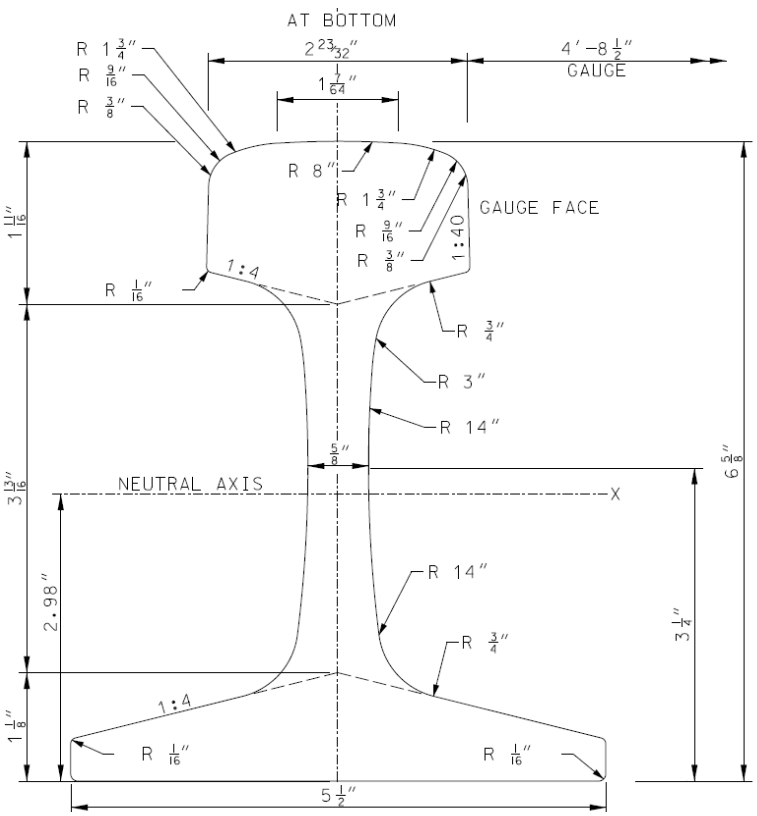

Figure 2.7 - Tee Rail Section

Deleted: *DRAFT*

Deleted: *Downtown*

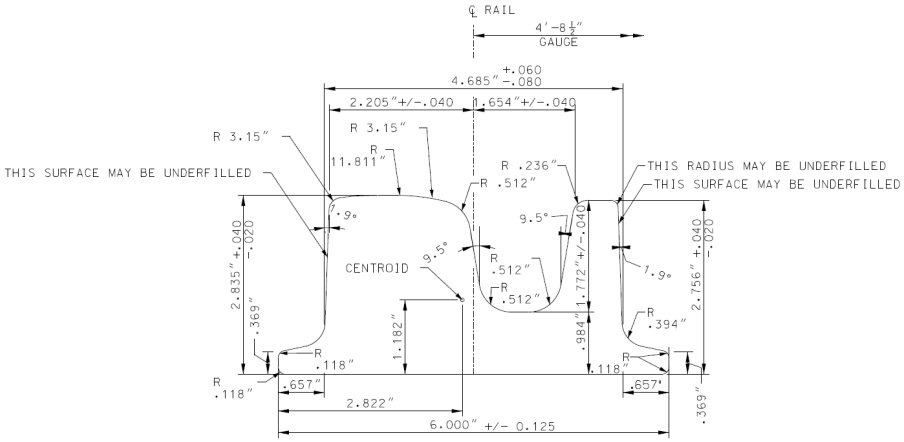

Figure 2.8 – 112 TRAM Rail Section

Deleted: *DRAFT*

Deleted: *Downtown*

THIS PAGE INTENTIONALLY LEFT BLANK

Deleted: *DRAFT*

Deleted: *Downtown*

3.0 CIVIL WORK

This chapter establishes the basic civil engineering criteria to be used in the preliminary design of the streetcar project. It includes criteria for the design of streetcar transit system surveys, drainage, roadways/paving, and determination of required rights-of-way.

3.1 Survey Control System

All horizontal and vertical controls for this project shall be based on survey control points established under the direction of KCMO. Coordinates for project control points established for the system shall be based on the latest KCMO control network horizontally and vertically.

3.2 Drainage

The goal in the design of rail transit system drainage is to protect the rail system track and facilities from stormwater runoff damage and to protect KCMO from liability for damage to property from resulting stormwater runoff, either passing through or caused by streetcar construction and permanent facilities, while maintaining consistency with the requirements of the Clean Water Act.

The design of drainage facilities shall be in accordance with the requirements of the current version of the Kansas City Metropolitan Chapter of the American Public Works Association, Section 5600 Storm Drainage Systems and Facilities.

Designs of drainage facilities belonging to other agencies which are relocated or modified because of streetcar construction and which do not cross or parallel streetcar system guideway or facilities shall conform to the design criteria and standards of the agency or jurisdiction involved.

Storm drain manholes should not be placed within the streetcar guideway unless absolutely necessary. When easements and right-of-way are involved, manholes should be located in the right-of-way. Manholes should be located as close to changes in grade as feasible. As well, street catch basins should also follow these same criteria.

Deleted: right of way

Deleted: right of way

3.3 Right-Of-Way

Streetcar rights-of-way shall be classified as either semi-exclusive or non-exclusive (mixed traffic). Semi-exclusive streetcar rights-of-way are those physically protected by curbs or barriers which prevent other vehicles from entering the right-of-way but which allow at-grade crossings. Non-exclusive right-of-way represents in-street operation in which track areas are also used by other traffic.

Right-of-way is the composite total requirement of all real property, interests and uses, both temporary and permanent, needed to construct, maintain, protect, and operate the streetcar. The intent is to acquire and maintain the minimum right-of-way required consistent with the requirements of the streetcar project.

The required amount of right-of-way to be taken is influenced by the existing topography, drainage, service roads, utilities, the nature of the streetcar structures selected, and disaster and/or firefighting requirements.

Deleted: taking envelope

Deleted: fire fighting

Deleted: *DRAFT*

Deleted: *Downtown*

Where property must be acquired to provide right-of-way for the streetcar project, such property acquisition shall be done in conformance with all appropriate city, state and federal regulations.

3.4 Roadways

Roadway design in public rights-of-way shall be in conformance with the City of Kansas City 5200 – Street Design Criteria, and also the specifications and design guidelines of the local agency having jurisdiction. The structural cross-section of the streetcar pavement shall be designed for a 20-year life to support the anticipated traffic use.

Deleted: cross

Road and parking surfaces shall be either Portland Cement Concrete Pavement (PCCP) or Plant-Mix Bituminous Pavement. The criteria set forth in this section are applicable to the design or alterations to existing streets.

Deleted: cement

Deleted: concrete

Deleted: pavement

3.4.1 Applicable Standards

Unless otherwise stated, roadway design shall be in accordance with the City of Kansas City Missouri (KCMO), Jackson County, and Missouri Department of Transportation (MoDOT) Design Standard Drawings except for design of new facilities or alterations to existing facilities to be owned or maintained by others. Those designs shall be in conformance with the current version of published standards and details of the local agency having jurisdiction.

The current versions of the following documents are incorporated into these design criteria by reference and should be adhered to wherever possible in the design of roads and parking and related traffic control.

- Kansas City, Mo. Public Works Design Criteria And Construction and Material Specifications
- City of Kansas City, Mo. Public Works Standard Drawings
- Kansas City Metropolitan Chapter of the American Public Works Association
- Missouri Department of Transportation Plans Preparation Manual (PPM)
- Missouri Department of Transportation Design Standards
- Proposed Accessibility Guidelines for Pedestrian Facilities in the Public Right-of-Way (PROWAG), United States Access Board
- Manual of Uniform Traffic Control Devices (MUTCD)
- A Policy on Geometric Design of Highways and Streets (AASHTO)
- Roadway Design Guide (AASHTO)

3.4.2 Roadway Geometrics

Design of City of Kansas City, Mo. (KCMO) and Jackson County roadways shall be in accordance with Division IV Design Criteria, Section 5200 "Streets" from the KC Metro Chapter of APWA, and as listed below in these criteria.

Deleted: *A Policy on Geometric Design of Highways and Streets* (latest version) of AASHTO

Deleted: *DRAFT*

Deleted: *Downtown*

3.4.2.1 Traffic Lane Widths

Traffic lane widths will be based on roadway classification. City streets shall be classified in accordance with KCMO roadway classification standards. In cases of significant constraint, a width reduction may be specified with the approval of KCMO.

3.4.2.2 Number of Traffic Lanes

The number of traffic lanes and type of lanes (i.e., through, right, or left) shall be determined in consultation with KCMO and will be generally based on a traffic analysis that considers projected traffic volumes, streetcar vehicles intersection crossings, critical traffic movements, and geometric configurations.

Deleted: which

3.4.2.3 Parking Lanes

Parking lane locations shall be determined in consultation with KCMO based on traffic analysis, safety considerations and demand for on-street parking. Twenty-four hour parking prohibition shall be recommended at those locations (i.e., near intersections and at streetcar stops) where roadway width is not adequate to provide the necessary number of through lanes, where the streetcar dynamic envelope would conflict with a parked vehicle or where the streetcar would otherwise benefit operationally with the removal of parking spaces. Peak-hour parking prohibition shall be recommended at those locations where traffic analysis shows that the capacity of the traveled way without the parking lane will not provide level of service required.

Deleted: or

Deleted:

Deleted: Peak

3.4.2.4 Vertical Clearance

The minimum vertical clearance above the traffic lanes and shoulders on all roadways shall be 19 ft 0 in except where greater clearance is required by the agency having jurisdiction. The clearance shall apply over the entire vehicle roadway width including any contiguous auxiliary (turning) lanes and shoulders.

3.4.3 Curbs, Wheelchair Ramps and Curb Cuts

Curb and/or gutter will be replaced only when impacted by improvements required by the streetcar project. Curbs will be installed/replaced per Jackson County/KCMO Standard Details, with the exception of the stop locations. Refer to Passenger Stops in Chapter 6, for information regarding curbs at stop platforms.

Where the streetcar operates along a travel lane adjacent to on-street parking, a stop location is created by extending the sidewalk edge and curb line out to meet the travel lane (a curb extension or “bulb-out”) which can result in the elimination of three or four parking spaces.

Accessible curb ramps with curb cuts shall be provided in accordance with the following:

- Restore or replace any existing curb ramps impacted by construction. When intersection improvements are being implemented, all non-ADA-compliant pedestrian ramps at the intersection will be upgraded rather than only the affected quadrant, per KCMO requirements.
- Provide new curb ramps at intersections where sidewalk exists and the curb returns are modified as part of this project. It is not necessary to provide curb ramps where no sidewalk exists.
- Provide ramps and curb cuts at intersections or mid-block locations where new curb and sidewalk will be constructed as part of this project.

The design and location of curb cuts and ramps shall be in accordance with the applicable provisions of KCMO, MoDOT and United States Access Board's Proposed Accessibility Guidelines for Pedestrian Facilities in the Public Right-of-Way (PROWAG).

At driveways, the curb and gutter shall be depressed across the vehicle opening as per KCMO standards.

3.4.4 Sidewalks

Sidewalks shall comply with the standards of the local agency having jurisdiction. At a minimum, all sidewalks must have at least 4 feet in clear width. Cross slopes on sidewalks shall be a maximum of 2% per ADA guidelines. Existing sidewalks impacted by the project shall be repaired or replaced in kind, where practical. New sidewalks may be required at stops.

At stops, the minimum requirement for a sidewalk in front of the stop shelter is 3 feet from the edge of the detectable warning strip; with a 4-foot width being preferred. Access ramps for a stop with sidewalk behind the shelter will require extra sidewalk for a level landing area from the ramp(s) to allow for maneuverability between the ramp(s) and the sidewalk.

3.4.5 Driveways

Driveway pavement types and minimum widths shall be as per KCMO standards. In general, all existing driveways impacted by the project shall be replaced in kind, where practical. Driveway closings required to facilitate streetcar operations or construction must be approved by KCMO.

3.4.6 Roadway Paving

A cross-slope greater than 0% between the rails in tangent track or reverse super elevation is undesirable. Cross-slopes between rails through the track section should be avoided when possible as it can result in uneven rail and wheel wear. A level (0% cross-slope) slab should be used between rails for all tangent track except in highly restrictive grading situations where some cross-slope may be required to accommodate existing roadway cross-slopes. A slight cross-slope can be introduced to reduce pavement reconstruction or drainage impacts, but the best solution is to provide a 0% cross-slope between rails with flexible "wings" on the outer portions of the guideway that vary in slope (1% to 7%) to accommodate for the overall cross-slope of the existing roadway.

To minimize cost, the track design will attempt to limit roadway reconstruction to only that required for the construction of the track and installation of relocated utilities. Figure 3.1 illustrates the approach for defining the limits of roadway reconstruction.

Deleted: *DRAFT*

Deleted: *Downtown*

Deleted: <#>Curb ramps at intersections along the non-revenue track portions of the alignment will not be reconstructed. ¶

Deleted: 4

Deleted: cross slope

Deleted: Cross slopes

Deleted: cross slope

Deleted: cross slope

Deleted: cross slopes

Deleted: cross slope

Deleted: cross slope

Deleted: 'wings'

Deleted: cross slope

Deleted: *DRAFT*
Deleted: *Downtown*

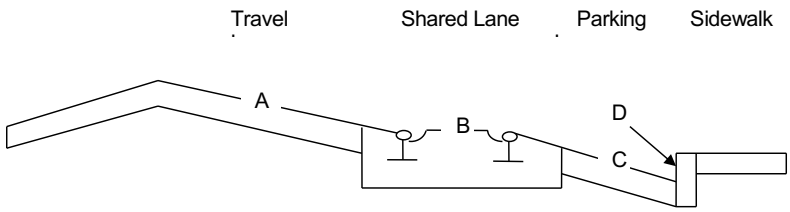

	Desirable	Maximum	Minimum
A	2%	5% or Match Existing	1% or Match Existing
B	0%	1%	0%
C	2-4%	7% or Match Existing	1% or Match Existing
D	6-8 inches	10 inches (8" at bus stops)	4 inches

Figure 3.1 – Proposed Roadway Cross Slopes

It is recommended that the entire roadway surface be treated in some manner to enhance the overall benefit of the streetcar and leave the street in a much improved state. If reconstruction of the entire roadway is required, the cross-slopes presented in the previous graphic can be improved upon to achieve a more desirable cross-slope.

Deleted: by
Deleted: alignment
Deleted: cross slopes
Deleted: cross slope

Restored or widened city streets shall be designed in accordance with KCMO standards. For city streets designated as state routes, the pavement design shall be in accordance with MoDOT Standards.

Travel lanes, drop-off lanes, access drives, stop bars and selected crosswalks shall be designated with striping as per KCMO standards. Striping, pavement markings and/or pavement treatments for dedicated mobility lanes shall also be considered.

3.4.7 Traffic Maintenance and Protection

The design drawings shall be in accordance with the *Manual of Uniform Traffic Control Devices* (MUTCD) or the requirements of KCMO and shall include traffic staging and detour plans submitted to and approved by local agencies. The maintenance and protection of both vehicular and pedestrian traffic must be addressed on the plans.

Construction of railroad (RR) crossings shall be completed in one continuous work period timed to minimize delays on tracks. Approval of construction plans and construction sequence are required by the impacted railroad.

Deleted: *DRAFT*

Deleted: *Downtown*

Pedestrian traffic shall be maintained where it is possible to do so safely. The designer shall include any site-specific requirements in the design drawings. Maintenance of pedestrian traffic shall be in accordance with the MUTCD standards, as appropriate.

3.5 Intersections

Intersection design shall be in conformance with the specifications and design guidelines of the local agency having jurisdiction. The intersection should be designed while keeping efficiency, transit involvement, safety, cost of operation, capacity, and bicycle and pedestrian movements in mind.

In general, existing intersections significantly impacted by the project will be reconstructed to applicable standard. Intersection closings required to facilitate streetcar operations or construction must be approved by KCMO.

3.6 Pedestrians and Bicyclists

Pedestrian and bicycle facilities should be considered as part of the overall design of the transit network and, if impacted, the reconstruction shall comply with the standards of the applicable municipal or county jurisdiction.

Pedestrian facilities include sidewalks, crosswalks, wayfinding signs, and pedestrian signals (including pedestrian detection). Bicycle facilities include paved shoulders, dedicated bicycle paths and cycle tracks, marked and unmarked traffic lanes, bicycle-safe drainage grates and manholes, bicycle striping, and bicycle signage.

Deleted: *DRAFT*

Deleted: *Downtown*

THIS PAGE INTENTIONALLY LEFT BLANK

Deleted: *DRAFT*

Deleted: *Downtown*

4.0 UTILITIES

Design criteria for utilities shall be based on KCMO Utility Relocation Guidelines, and shall govern the planning and design of maintenance, support, restoration, abandonment, reconstruction, removal and construction of utilities encountered or affected by construction of the streetcar system.

Utilities design criteria shall be coordinated with, and in compliance with, the requirements of the municipalities, utility owners, and the applicable codes, regulations, and policies as established by, but not limited to, the Kansas City Missouri Building Code, the City of Kansas City Missouri, Missouri Water Services Department, and Jackson County Unified Development Code. The following is a list of both public and private utility companies to be affected by the construction of the streetcar project.

Public utility agencies:

- Jackson County Storm Water Commission
- City of Kansas City Missouri Water Services Department (KCMO WSD)
- Missouri Department of Natural Resources- Division of Environmental Quality

Private utility agencies:

- Kansas City Power & Light (KCP&L)
- Aquila
- Missouri Gas Energy (MGE, natural gas)
- Comcast
- SureWest
- AT & T
- Time Warner
- Birch Telecom

4.1 Pre-Construction

The objective of pre-construction activities is to ensure that pertinent utility information is obtained, properly incorporated into the design process, and shown on engineering plans. Information to be acquired includes owner, type, size, material, location, and existing right-of-way (ROW) of all existing and proposed utility facilities affected by the streetcar construction, and the disposition of existing and proposed facilities within the project limits.

The streetcar trackway will likely be in conflict with underground and above ground utilities at many locations along the proposed route. During planning and early engineering phases, designers shall seek to place the trackway to avoid impacting existing utilities as much as practical. However, not all impacts can be avoided, and once a conflict is identified, the designer and KCMO shall decide a course of action to mitigate the impact to the utility. Impacts include the influence of stray current on metallic utilities, conflicts with streetcar-related facilities,

Deleted: *DRAFT*

Deleted: *Downtown*

such as OCS poles, and changes in access to the utility due to the trackway. Mitigation strategies shall be developed according to the KCMO Utility Relocation Guidelines.

The following information shall be clearly and correctly identified on the final construction drawings:

- Utilities that are to be protected in place, supported and maintained during construction and continued in service following construction of the streetcar system.
- Utilities temporarily relocated and maintained, then restored upon completion of the streetcar system.
- Utilities permanently relocated beyond the immediate limits of streetcar construction.
- Utilities that have been abandoned, or are to be abandoned and removed.
- Utilities that are to be abandoned in place.
- Utilities that are to be removed.
- Existing utility ROW and properties to be acquired for their relocation, if any.

Existing utility service shall not be interrupted and, if temporarily relocated, shall be restored upon completion of work to the original condition or better. Replacements for existing sewers or water mains shall be designed to provide service equal to that offered by the existing installations. Designers must bring any proposal for betterment to the attention of KCMO at an early stage of the design. No betterments shall be included unless specifically approved by the utility owner or public agency and KCMO prior to final design.

4.1.1 Approval Process

The horizontal and vertical alignments, ROW and construction easements of the streetcar system and affected roadways, and the necessary property lines adjacent to the ROW will be indicated in the final construction documents. As the design is developed, the affected utility companies will be furnished with preliminary plans and specifications.

Design drawings prepared by the utility companies shall be reviewed and approved by KCMO and the design consultant. All utility relocation plans shall be reviewed by the design consultant prior to final submittal to KCMO for final permitting. The review shall consider space reservations for utility work to be completed during final streetcar system work.

The utility company design drawings shall be consistent with any work authorization estimates and compatible with the work of other utility agencies. Pertinent utility elevations and locations shall be checked by field survey and potholing (subsurface utility engineering, or SUE). Plans being developed by others in adjoining areas shall be checked to ensure that the overall utilities systems will be comparable to those existing before start of construction and that they will be compatible with the streetcar system.

New construction and the support, maintenance, restoration, rearrangement, and relocation of utilities shall be in strict conformance with the latest technical specification and practices of the governing utilities or public agencies.

Deleted: *DRAFT*

Deleted: *Downtown*

Standard specifications and standard utility drawings for the various utilities shall be incorporated into the contract documents as required. In the event that there are no standards, final design shall be in accordance with the current design criteria and engineering practices for the particular utility agency involved. Satisfactory completion of the work and its acceptance shall be signified through sign off by the responsible utility or agency.

Utility coordination meetings are encouraged and may be requested by utility owners to exchange information and resolve potential conflicts with the design engineer and KCMO. In addition, the project will eventually be brought into the monthly utility liaison coordination committee (ULCC) meetings.

4.2 Conflicting Utility Design Criteria

4.2.1 Gas Lines

Permanently relocated gas lines shall be designed, installed, and tested in accordance with the current standards used by the utility owner (MGE for this project), and will follow:

- "Minimum Federal Safety Standards for Gas Lines, Title 49 Codes of Federal Regulations, Part 192."
- "ASME Guide for Gas Transmission and Distribution Piping Systems" of the American Society of Mechanical Engineers' Gas Piping Standards Committee.

Construction of temporary and/or permanent gas mains and replacement of mains will be evaluated by the utility owner company and KCMO on a case-by-case basis. The design consultant will consider and recommend the most efficient of options for the project. Gas lines that are to be supported and protected in place shall be identified by the utility owner.

Pipe installed within the limits of the streetcar guideway shall be designed to support the dead loads imposed by earth, sub-base, embedded track section, and vehicular loads when the pipe is operated under a range of pressure from maximum internal to zero. General specifications of the pipe parallel to the guideway should be 5 feet outside the edge of the guideway where possible. Pipe crossing the guideway shall have 42” of cover and be designed to support the loads imposed by earth, sub-base, embedded track section, and vehicular loads when the pipe is operated under a range of pressure from maximum internal to zero. Pipe crossing the guideway shall be sleeved to a distance of 10 feet from the track centerline when possible.

Steel carrier pipe shall be protectively coated and provided with a cathodic protection system in conformance with the corrosion control requirements of the "Minimum Federal Safety Standards for Gas Lines, Title 49 Code of Federal Regulations, Part 192, Subpart I” and the current standards of the utility owner.

All cathodic protection test points shall be a minimum of 5 feet outside the edge of the guideway. Pipe that is crossing the guideway should have cathodic protection test points on both sides of the guideway, with a minimum of 5 feet outside the edge of the guideway as directed by the utility owner and KCMO.

A mandatory preconstruction field meeting will be required prior to the start of any major gas line relocation project; attendees should include, but are not limited to, KCMO Inspector, the

Deleted: *DRAFT*

Deleted: *Downtown*

construction contractor, the traffic control manager, and the utilities manager for the streetcar project.

4.2.2 Sanitary Sewer

Relocations, replacements, or extensions of existing sanitary sewer systems serving other than the streetcar facilities shall comply with all federal, state and local standards; shall be approved by the City of Kansas City Mo. Water Services Department; shall be designed to the criteria of the local agency having jurisdiction as well as criteria set forth by the Kansas City, Mo. Water Services Department; and shall conform to the following Kansas City Metropolitan Chapter of the American Public Works Association requirements:

- General specifications of the pipe parallel to the guideway should remain 10 feet outside the edge of the guideway when possible. Pipe parallel to the streetcar guideway shall be evaluated by KCMO WSD as to its condition and ability to remain in place or be relocated on a case-by-case basis. Pipe crossing or installed parallel to the guideway shall be designed to support the loads imposed by earth, sub-base, embedded track section, and vehicular loads.

- All cathodic protection test points (when required), manholes, and access points shall be a minimum of 5 feet outside the edge of the guideway. For sewer pipes crossing the guideway that require cathodic protection, test points shall be located on both sides of the guideway, with a minimum of 5 feet horizontal clearance from the outside the edge of the guideway.

- Sanitary sewer service to adjoining properties shall be maintained at all times by supporting in place, by providing alternate, temporary facilities, or by diverting to other points.

- Construction of permanent relocations, and temporarily relocated and restored sewer lines requiring support and maintenance in place shall be the responsibility of the contractor.

4.2.3 Storm Sewers

Existing storm sewer pipes parallel to the guideway shall be evaluated by KCMO as to their condition and ability to remain in place or be relocated on a case-by-case basis. Existing manholes shall be evaluated for conflicts with the streetcar guideway and relocated as necessary to provide access to existing pipes.

4.2.4 Electrical Power Facilities

All design work, maintenance, and relocation efforts, of underground and above-ground electric lines throughout the streetcar corridor shall be in strict conformance with current practices of the power company, the requirements of the Electrical Code of the local agency having jurisdiction, and the National Electric Safety Code (NESC).

Deleted: *DRAFT*
Deleted: *Downtown*

4.2.5 Telephone Communications Facilities

Relocation design and support of existing telephone communication lines during construction of the streetcar shall be in strict conformance with the current practices of the telecommunications industry and under the terms of their franchise agreement with KCMO.

Declaration and identification of Prior Rights, equipment easements, private easements and public easements shall be the responsibility of the utility owner.

In the event of a required relocation, the relocating utility shall notify other utilities of the proposed new alignment to explore opportunities for a joint trench effort.

4.2.6 Water

Relocations and rearrangements of existing water mains impacted by streetcar construction shall comply with applicable Federal, State, and local standards and the standards of ANSI, AWWA and regulations of the Kansas City Metropolitan Chapter of the American Public Works Association Section 2900 standards; and shall be designed to the criteria of the Kansas City Metropolitan Chapter of the American Public Works Association Section 2900 standards, and Missouri Department of Natural Resources- Division of Environmental Quality.

4.2.7 Street Lights and Traffic Signals

All relocations (temporary or permanent) and maintenance of municipal street lights and traffic signal equipment shall be in accordance with the requirements of the local agency having jurisdiction. The combined resultant of both the existing lighting elements to remain and any proposed replacement lighting elements will be evaluated to meet or exceed City of Kansas City, Mo/Jackson County Lighting Design Criteria.

The street and traffic lights are usually either served by cables located in conduits, municipally owned, or wires on poles of the owner utility company.

Existing lighting in conflict with proposed improvements will be relocated or removed and new lighting installed. All other lighting will be protected in place. The contractor shall maintain street lights and traffic signal equipment during construction. The contractor shall provide temporary traffic signals which may be required as a result of streetcar system construction operations in accordance with Chapter 14, Traffic, and the consent of the utility owner.

It is anticipated that the existing underground power distribution for the existing roadway lighting will remain intact. In locations where new lighting is proposed, new underground power distribution for lighting will be proposed and new points of service established with the power service company. The power distribution system for lighting will remain independent of the OCS designed for streetcar propulsion.

All traffic signal modifications and new installations will conform to KCMO design standards, National Electrical Safety Code (NESC), and the *Manual on Uniform Traffic Control Devices* (MUTCD). A minimum 4-foot clearance will be required between any traffic signal face and the overhead streetcar conductor, in order to meet NESC and OSHA safety requirements. It is recommended that new traffic signal installations use a pole-and-mast-arm configuration as opposed to span-wire wherever possible for consistency with existing traffic signals and City standards.

Deleted: pole
Deleted: and
Deleted: mast
Deleted: span

Deleted: *DRAFT*
Deleted: *Downtown*

Traffic signal system design will include the following:

- Existing signal equipment will be re-used and incorporated into new designs wherever possible, with new equipment only used where required as a result of the streetcar impacts.
- Traffic signals will be a pole and mast arm configuration, generally consisting of a pole-mounted signal head and one signal head per approach lane on the mast arm, supplemented by a far-left signal head where necessary to meet MUTCD cone of vision requirements.

Deleted: a
Deleted: single

- At existing traffic signals and All Way Stop-Controlled (AWSC) locations poles, mast arms, and underground infrastructure will be incorporated into the design of new traffic signals where feasible and cost-effective. The design team will evaluate each affected pole and mast arm during the design process.

Deleted: Controller

- At existing traffic signal and AWSC locations, existing electrical points of service will be considered and incorporated into the traffic signal design. New electrical points of service and equipment will only be designed if existing conditions warrant the new service.
- The height of existing pedestrian signals on some signal poles will need to be adjusted to accommodate pole-mounted signal heads and pedestrian indications in accordance with MUTCD requirements.

Deleted: H
Deleted: lighting

-

Deleted: Fiber optic conduit and cable will only be installed as directed by KCMO.

- Existing pull boxes will be utilized where feasible; however, replacement and upsizing of pull boxes will occur at the direction of KCMO.
- New traffic signal conductors will be pulled through existing conduits where feasible. Existing metal conduits will be replaced with PVC conduits as part of traffic signal modifications.

4.2.8 Parking Meters

The local agency having jurisdiction will remove and restore existing meter heads including coin vaults. The contractor will remove, store, and reinstall posts after completion of streetcar construction.

Where stand-alone parking vending machines are encountered, KCMO will address removal and reinstalling of equipment. Work by the owner agency/municipality will be at no cost to the contractor unless otherwise indicated in the Contract Documents.

Deleted: stand alone

4.2.9 Private Vaults

Remodeling, abandonment or other work involving existing private vaults extending from adjoining buildings into public space shall be in strict accordance with rules, regulations and practices of the local agency having jurisdiction, and shall include currently applicable Building Codes, Electrical Codes, Plumbing Codes, and the NESC.

Deleted: *DRAFT*

Deleted: *Downtown*

4.2.10 Overhead Utility Lines

Abandonment, relocation, restoration, maintenance, and extension of existing overhead utility lines, poles, and appurtenances, including service lines to adjoining properties, will be performed by the utility owners in accordance with laws and regulations of the appropriate jurisdiction, utility owners' standards, the NESC, and the appropriate owner utility company or their approved contractor.

Poles supporting overhead facilities may be owned by one party and shared with or rented to others under mutual agreement. Utilities in this joint use arrangement are:

- Electric Cables
- Telephone Cables
- Cable Television
- Railroad Communication Lines
- Police, Fire Alarm and other Government Lines
- Street Lights and Traffic Signals

The designers shall coordinate their efforts with those of the owners to assure that KCMO plans include designs mutually acceptable to the owners and KCMO.

Plans shall denote the general type of service provided by overhead lines in accordance with the symbols of Utility Standard Drawing.

Certain jurisdictions may restrict the use of overhead lines in some areas. The designer shall reflect these requirements in the project design.

Clearances shall be in accordance with the standards adopted by the utilities involved. Those specified in the NESC shall be considered the minimum requirements with respect to the streetcar OCS and structures.

The designer shall evaluate the need for relocation of existing overhead high-voltage electric lines, including transmission lines, due to hazards from the streetcar's OCS system, streetcar route control, or streetcar operations. Findings and recommendations shall be developed and submitted to the appropriate utility agency for consideration and inclusion in the project's files and construction documents.

Deleted: *DRAFT*

Deleted: *Downtown*

This page intentionally left blank

Deleted: *DRAFT*

Deleted: *Downtown*

5.0 STRUCTURAL

5.1 General

This chapter defines the preliminary structural design criteria and standards for the streetcar line. Structures anticipated include bridges, viaducts, and other miscellaneous structures.

5.2 Applicable Codes and Standards

The following codes, manuals and specifications shall be applicable to the design of structures (all publications listed shall be the latest edition unless noted otherwise):

- American Association of State Highway and Transportation Officials (AASHTO) LFD or LRFD Bridge Design Specifications (hereinafter referred to the AASHTO LFD or LRFD Specifications);
- AASHTO Guide Specifications for Design and Construction of Segmental Concrete Bridges;
- AASHTO Guide Specifications for Structural Design of Sound Barriers;
- Missouri Department of Transportation (MoDOT) Bridge Design Manual;
- AREMA Manual for Railway Engineering (hereinafter referred to as the AREMA Manual);
- International Code Council (ICC);
- International Building Code (IBC);
- American Concrete Institute (ACI) ACI 318 Building Code Requirements for Reinforced Concrete (hereinafter referred to as ACI 318);
- American Institute of Steel Construction (AISC) Specification for Structural Steel Buildings (hereinafter referred to as the AISC Specifications);
- Concrete Reinforcing Steel Institute (CRSI) Manual of Standard Practice (hereinafter referred to as the CRSI Manual);
- City of Kansas City Mo. Public Works Design Criteria & Construction Specifications.

5.3 Loads and Forces

The load rating method for each structure shall be as follows:

- Main Street Viaduct over the Kansas City Terminal Railway – Load Factor Design
- Main Street over Brush Creek – Load Factor Design

Deleted: <#>Delaware Street over I-35/I-70 – Load Factor Rating¶
<#>Main Street over I-670 – Allowable Stress Rating¶

Each bridge shall be load rated at two levels, inventory and operating levels. The general expression for determining the load rating factor of the structure shall be:

$$RF = \frac{C - (A) \times D}{A(2) \times L \times (1 + l)}$$

Where:

RF = the rating factor for live load to be multiplied by the weight of the rating vehicle in tons to give the rating of the structure

C = The capacity of the member

D = The dead load effect on the member

L = The live load effect on the member

L = The impact factor to be used with the live load effect

A(1) = The factor for dead loads

A(2) = The factor for live loads

5.3.1 Dead Loads

The dead load along bridges shall consist of the existing dead load of the basic structure plus an additional superimposed dead load due to a infill pavement and rail in elastomeric grout. The thickness of this infill will be based on the design depth the existing structure can accommodate and the rail being used to cross the structure. The minimum unit weight of infill pavement shall be the weight of concrete, 150 lb. per cu ft. and the weight of rail used in the calculations will be the weight of actual rail used on structure. If a new bridge is being designed the design shall use the 112 lb. tram rail (112 lb. per yd. for the rail loading).

5.3.2 Live Loads

- Structures subject to streetcar loading shall be designed for the AW3 vehicle loading for the CAF Urbos 3 Low Floor Streetcar Vehicle which is 109,260 lbs.
- New structures subject to highway loading shall be designed for HL-93 truck loads. Existing structures shall be checked using the design code the bridge was originally designed for and/or the latest LRFD code.
- The dynamic load allowance shall be in accordance with the AASHTO LFD or LRFD Standard Specifications for highway bridges applied to the streetcar and MoDOT rating vehicles.
- The distribution of live loads shall be the number of traffic lanes to be loaded and corresponding distribution factors shall be in accordance with the AASHTO LFD or LRFD Standard Specifications for Highway Bridges. As well, a reduction in load intensity for additional lanes loaded shall follow the same criteria.

5.3.3 Other Loads and Forces

Other loads and forces (i.e., wind, thermal, longitudinal, centrifugal, shrinkage, etc.) on structures shall be as follows:

Deleted: *DRAFT*
Deleted: *Downtown*
Deleted: 3.5-inch
Deleted: which
Deleted: be
Deleted:)
Deleted: S
Deleted: LFRD
Deleted: (30 percent maximum)
Deleted: LFRD

Deleted: *DRAFT*

Deleted: *Downtown*

- Structures subject to streetcar or highway loading: AASHTO LFD or LRFD Specifications;
- Structures subject to railroad loading: AREMA Manual;
- Other structures: International Building Code.

5.4 Soils

The soils in the Kansas City area vary widely. Soil and geologic data for the preliminary design of structures shall be site specific data.

5.5 Reinforced and Pre-Stressed Concrete

The rating of pre-stressed concrete members at both Inventory and Operating level shall be established using strength requirements of the AASHTO LFD or LRFD Standard Specifications. In addition, at Inventory level, the rating must consider the allowable stresses at service load as specified in the AASHTO Standard Specifications.

Deleted: LFRD

The compressive strength of existing concrete members shall be taken from the original bridge design Plans.

5.6 Structural Steel

Structural steel structures shall be designed in accordance with the requirements of the following:

- Structures subject to streetcar loading: AASHTO LFD or LRFD and AISC;
- Structures subject to railroad loading: AREMA Manual;
- Structures subject to highway loading: AASHTO LFD or LRFD and Mo Standards;
- Buildings and other structures: IBC and AISC Specifications.

5.7 Foundations

Foundations for structures shall be designed in accordance with the site specific soil and geological data as well as requirements of the following:

- Structures subject to streetcar and OCS loading: AASHTO LFD or LRFD Specifications;
- Structures subject to railroad loading: AREMA Manual;
- Structures subject to highway loading: AASHTO LFD or LRFD Specifications and MoDOT Standards.

Deleted: *DRAFT*

Deleted: *Downtown*

This page intentionally left blank

Deleted: *DRAFT*
Deleted: *Downtown*

6.0 STREETCAR PASSENGER FACILITIES

6.1 Streetcar Stop Design

The layout and design of a streetcar stop will be dependent upon a number of factors including:

- location of the stop in the roadway (curb-side or median)
- location of the stop with respect to an intersection (near or far-side)
- dimensions and configuration of the streetcar/bus vehicle, including presence of doors, ADA boarding locations, and low-floor/high-floor layout
- availability of space (including sidewalk) behind the street curbs and within the right-of-way
- type of shelter (if desired/required) to be provided at a stop
- presence or absence of on-street parking at the site of the stop
- codes, regulations, and standards, including but not limited to:
    - Americans with Disability Act (ADA) Title II Regulations (Title II), ADA Title III Regulations (Title III), and ADA Accessibility Guidelines for Buildings and Facilities (ADAAG);
    - Code of Federal Regulations (CFR), 49 CFR Part 38 – Accessibility Specifications for Transportation Vehicles;
    - Uniform Building Code;
    - National Fire Protection Association (NFPA) Standards (NFPA 130, NFPA 72, NFPA 70, and NFPA 101); and
    - Federal/local/state codes and regulations.

Deleted: right of way

Deleted: American with Disabilities Act

6.2 Dimensions of Stop

For the CAF Urbos 100% low-floor streetcar vehicle (assumed for the project), the stop will be sized to level boarding for the two middle doors and will provide step access for the front and back doors. These stops require approximately 90-100 feet to provide a minimum of 27 feet of tangent level boarding and 20-30 feet to slope down to the front and back doors and transition the "bulb out" curb extension back to the existing curb line.

Deleted: low
Deleted:
Deleted: 60-70

Figure 6.1 is an illustration of the general platform layout and recommended location of level boarding, ramps and landings for the stop. The green area in the figure is the level boarding portion of the platform that correlates with the accessible portion of the streetcar (middle two doors). This area will be designed with a platform height of 14" above top of rail (level boarding). From there, the platform slopes down at approximately 4.5% (varies depending on existing street grades) in the inside pink areas to an elevation of a desirable 7" (maximum 8" with approval from KCMO and KCATA) above top of rail to a "landing" area that lines up with the front and back doors of the vehicle. These landing areas are indicated by the blue portions in Figure 8 and will be sloped to match the existing roadway grade with an approximate 6-7" step down from the streetcar to the platform. The proposed "landing" area is intended to allow buses to share the platform and sloped to match the roadway grade to allow for the bus ramp to be level with the sidewalk. The outside pink areas indicate the portion of the platform where it ties into the existing/proposed sidewalk; the length of these tie-ins will depend on the

Deleted: proposed

existing/proposed grades. It is important to note that the grade of the platform should match the grade of the roadway so that there is a level gap between streetcar and platform for ADA streetcar users.

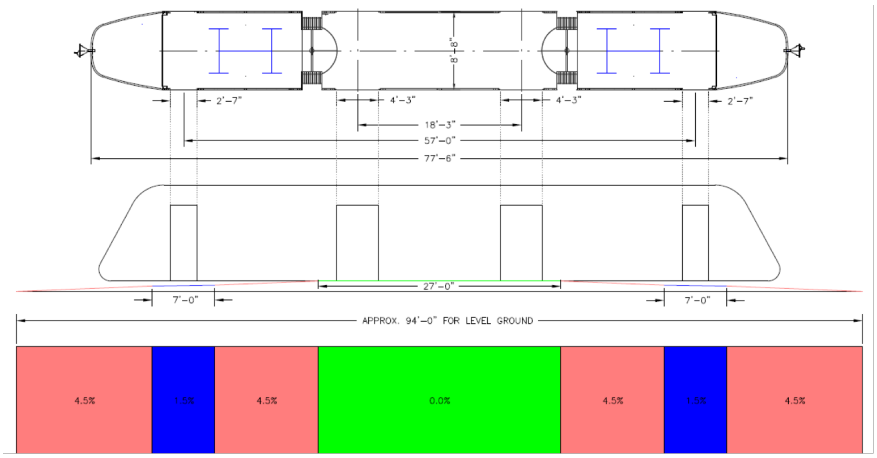

Figure 6.1 – Schematic of Proposed Streetcar Stop Configuration

The width of the streetcar stop is dependent on a number of factors:

- Type of stop – median or sidewalk, single or dual-direction
- ADA accessible route and boarding area
- Type of canopy/shelter and other amenities, if desired

The width of the streetcar stop should be 8 feet for side stops and 10 feet for median stops serving a single direction (12 feet when serving both directions).

All side stops should be designed to share stops between streetcars and buses where practical. There may be parallel bus routes (existing or future) that remain in place and can, where practical, share a stop with the streetcar. The recommended layout in Figure 6.1 accommodates KCATA's bus fleet. The 7" high platform (blue area) that is recommended for accessing the front and rear doors of the streetcar is the platform height that is also compatible with the front door and ADA ramp on KCATA's bus fleet. The 14" high platform (green area) that is required for accessing the middle doors of the streetcar is the platform height that is also compatible with the rear door of a KCATA bus.

6.3 Stop Shelter and Amenities

The presence and type of canopies/shelters at stops shall be evaluated on a case-by-case basis for each stop. The influence of external factors, such as limited width or shelter provided by existing canopies, buildings, or trees, can affect the design and location of shelters. Similarly, KCMO and KCATA could choose to design and construct shelters rather than installing pre-fabricated ones. In addition to a shelter, the stops should include other amenities such as a seat wall, leaning/guard rails where appropriate and a "Next Streetcar/Bus" display

Deleted: *DRAFT*

Deleted: *Downtown*

Deleted: of

Deleted: which

Deleted: case

Deleted: by

Deleted: These shelters can be enclosed or freestanding

which indicates the arrival time of the next streetcar/bus. No furnishings will be provided on the platform other than the shelter. Furnishings such as benches, bike racks and trash receptacles will be located off of the platform and be provided by others to conform to local streetscape standards.

6.4 Stop Locations, Bicycle Lanes, and Parking

Placement of stops must consider other uses of the roadway - traffic conditions, bicyclists, parking, and pedestrians. Streetcar vehicles are designed with low-floor doors on both sides of the vehicles, allowing the system flexibility to have right- or left-side boarding. The location of the track within the roadway often follows desired stop placement; the location of stops and the location of track are interdependent and are designed and tested against each other during preliminary engineering. Outside stops are typically proposed when the following conditions are encountered:

- Single track on the roadway (in a couplet track or single track operation)
- Heavy left-turn volumes from the corridor to cross streets are present
- Narrow roadway width (too narrow for median stop); or a wide roadway with multiple lanes in each direction
- Side stop would enhance pedestrian activity and streetscape
- Parallel parking adjacent to curb can be removed for a streetcar stop 'bulb-out'

In addition, if the streetcar track is located on a one-way street, a left-side curbside stop may be desirable when the right lane moves slower due to on-street parking or when a bicycle lane is present.

Median stops are typically proposed when the following conditions are encountered:

- Bicycle lane and/or heavy bicycle traffic would be impeded by a curbside stop.
- Dual streetcar tracks (one in each direction) with ample space in between for a median stop
- Parallel parking or other curb-side features that cannot be removed

If bike lanes are incorporated as part of the alignment alternatives, a detailed study and appropriate design approach should be developed to safely integrate bikes into the overall design and stop configuration. This is particularly important for an outside-running streetcar adjacent to a bike lane. A common treatment is to make the stop an "island" and provide a bike bypass lane approximately 6" below (grade separated) the stop as shown in Figure 6.2.

Deleted: *DRAFT*

Deleted: *Downtown*

Deleted: the

Deleted: low

Deleted: Curb side

Deleted: a side

Deleted: *DRAFT*

Deleted: *Downtown*

Figure 6.2 – Streetcar Side Stop with Bike "Bypass"

- Careful planning, design and coordination with the bike and pedestrian community throughout the project development will result in a more comprehensive design and safer operating environment for all users of the public's right of way.

6.5 Public Art

Successful public works and transportation projects with integrated public art are important to the community of Kansas City, Missouri. The goal for the public art program is to enrich the transit experience, promote a sense of scale, and reinforce the connections of the diverse communities along the route. Artwork enhancing streetcar experience as unique, aesthetically and culturally relevant to this community is of high interest.

The KCMO Modern Streetcar public art program will be coordinated and managed by the Public Arts Program Coordinator, with support from the Streetcar Project Management team. Specific duties of the Public Arts Program Coordinator include:

- Implementation of the Modern Streetcar art program according to program direction from KCMO and its Program Management team;
- Retention, administration and management of artists for both levels of art opportunities;
- Assistance in efforts to gather input and support for the art projects from the community and stakeholders; and
- Coordination between design and construction contracts for the art projects during the engineering and construction phases of the Kansas City, Missouri Modern Streetcar project.

The community will be involved during the public art program through representation on the Project Panel for streetcar public artist selection and design review, along with any citizen

Deleted: *DRAFT*

Deleted: *Downtown*

advisory committees established through the course of a streetcar project.

Deleted: *DRAFT*

Deleted: *Downtown*

THIS PAGE INTENTIONALLY LEFT BLANK

Deleted: *DRAFT*

Deleted: *Downtown*

7.0 OPERATIONS

7.1 General

7.1.1 Purpose

This chapter provides a functional overview for the operation of the streetcar system. Design of systems and facilities elements should support and adhere to these operational criteria. Additional details on the operation of the system will be provided in the Streetcar Operating Plan.

7.1.2 System Description

KCMO is the project sponsor for the streetcar system. The Kansas City Streetcar Authority (KCSA) is the Operator of the streetcar system. Drivers of individual streetcars are termed Streetcar Operators. KCMO and KCSA will directly administer, operate, and maintain the streetcar revenue and non-revenue services described in this chapter.

Deleted: At the time of this publishing, the Operator of the streetcar system is unknown

Deleted: the Operator

The streetcar system shall be designed, managed, operated, and maintained so that it will be attractive to passengers and the community. The overall objective of the system operations is to provide a safe, reliable, convenient and cost-effective transit system that serves the mobility needs of the local community.

The safety of passengers, employees, and the local community will be the first priority of the streetcar system.

7.2 Operational Assumptions

7.2.1 General

The streetcar project will be designed to provide capacity sufficient for the peak-hour, and peak-direction passenger volumes projected for the design year.

Streetcars will operate over single and double track sections which will consist primarily of in-street operation. Under normal conditions, streetcars will operate in the forward direction on the right-hand track on double-track sections.

The system should strive to remain on existing streets, affecting only the portion of the roadway within existing curb lines as much as possible.

Streetcar operations related to stopping, door operation, acceleration, deceleration, and speed maintenance will be controlled by the Streetcar Operator. Streetcars that operate within existing street alignments are assumed to have a maximum operating speed that matches the posted speed limit of the roadway.

An Operations Command Center (OCC) shall be provided to oversee streetcar operations, maintenance, and safety. The OCC will serve as the communication and logistical hub for the system.

7.2.2 Operating Speeds

Where alignments are proposed within existing street lanes or rights-of-way, the track alignment should be designed to match the posted speed of the roadway. KCMO and the Operator should

Deleted: *DRAFT*

Deleted: *Downtown*

agree on locations where the track alignment design limits the operating speed to be less than the roadway posted speed limit. These should be clearly justified and agreed to by KCMO and the Operator. Typical design speeds for tangent and curved track are given below:

- Tangent track – Posted speed (+/- 35 MPH)
- Lane shift through intersection – Approximately 15 MPH
- 90 degree turn – Approximately 5-10 MPH

Deleted: 30

7.2.3 Terminal Operations

Terminal stop design will take into consideration future extensions where the stop may become a run through and/or intermediate turnback stop.

7.2.4 Yard Operations

Yard operations are all those functions which are necessary to provide streetcars for revenue service and receive streetcars for storage, in accordance with established operating schedules. The functions and location of yard control and supervision will be closely integrated with the OCC and/or rail supervisor as defined in the Streetcar Operating Plan and Standard Operations Procedures.

Yard operations will include the movement of streetcars between yard storage tracks, and mainline tracks and the movement of vehicles to-and-from the washing and maintenance shop facilities. Streetcar Operators may have the capability to perform any streetcar movements within the yard or on the mainline, however it is likely that yard movements will be performed by Yard Operators.

Permission from the OCC will be required before entering or leaving the yard area.

7.2.5 Street Operations

Streetcars will operate by line-of-sight in in-street, mixed traffic operations as governed by surrounding traffic control devices which shall incorporate progression for the streetcars and parallel traffic and by existing automobile and pedestrian traffic. Safe separation of streetcars shall be assured by the Streetcar Operator through visual observation of conditions and observation of operating rules and procedures.

Alignment Classifications

- **Non-Exclusive (Mixed Traffic)**. A right-of-way that is shared by vehicular traffic, such as a street, turn lane, transit/pedestrian mall, or dedicated transitway shared by other transit vehicles (e.g., buses). Operation in mixed traffic alignments will be line-of-sight, controlled by local traffic signals. Most of the streetcar alignment will be mixed traffic.
- **Semi-Exclusive**. A right-of-way that is separated and protected from parallel traffic, but which crosses non-parallel roads at grade. Separation may be achieved by mountable or unmountable curbs, barriers or safety fences. Protection at grade crossings may be provided by gates or signals.
- **Exclusive**. A right-of-way without grade crossings, which is grade-separated or protected by a permanent barrier.

Deleted: *DRAFT*

Deleted: *Downtown*

7.2.6 Emergency and Abnormal Operations

The streetcar control system and operating procedures shall permit streetcars to move in the reverse direction against the normal flow of traffic between crossovers under the supervision of either the OCC, Road Supervisor, and/or local law enforcement in the event that normal streetcar operation cannot continue through on the normal track due to an emergency situation or special event. .

Operating procedures and permissible headways will be developed for conducting unscheduled operations during emergencies, scheduled maintenance, and abnormal operations. The Streetcar Operating Plan further describes operating procedures during abnormal conditions.

7.2.7 Operation Constraints

There are many events, festivals, concerts, etc. that occur in downtown Kansas City that could have an impact on the operations of the alignment. It is relatively common for some of the streets in downtown to be closed during larger events. There are two types of events that are typical in the corridor; partial day and full day closures.

7.3 Security

This section gives a brief detail of the security plan for the streetcar system. A more detailed plan will be created and documented in the System Safety and Security Plan (SSSP) to be developed by the Operator and KCMO.

7.3.1 Field Operations Security

Field operations security shall be accomplished by fare inspectors. In the event of a safety or security incident, Streetcar Operators, Road Supervisors, fare inspectors, and other Operator personnel will be directed to immediately contact the Kansas City Police Department and the OCC.

7.3.2 Yard Security

Yard security will be performed by Operator staff and/or their contractors. Yard security personnel will have radio contact with the OCC.

Deleted: *DRAFT*

Deleted: *Downtown*

THIS PAGE INTENTIONALLY LEFT BLANK

8.0 VEHICLE

8.1 Vehicle Data and Critical Dimensions

The current vehicle fleet consists of CAF Urbos 3 streetcars which are double-ended, double-sided, modern streetcar vehicle of a multi-articulated low-floor design. Additional vehicles procured for the fleet shall be required to conform to vehicle specifications critical to maintain consistent operations, horizontal and vertical clearances, ADA compliance at stops, and compatibility with the existing and proposed track alignments.

Vehicle information is provided in Table 8-1.

Table 8.1 –Vehicle Information

Description	Preliminary Data
Overall Length	77 ft 6 in (23.62 m)
Carbody Width (over sides)	8 ft – 8.334 in (2.65 m)
Carbody Width (over door threshold extensions)	8 ft – 10.709 in (2.71 m)
Capacity (at AW2)	32 seats (+6 folding) + 116 standees = 148 passengers
Maximum Height	12 ft 8 in (3.86 m) pantograph down and locked
Door threshold height from TOR	14 in (355mm) for fully-level boarding
Wayside Platform Height (TOR to top of Platform)	14 in (355mm) for fully-level boarding
Automatic Load-Levelling	Provided (max range of adjustment TBD)
Low Floor Area	100%
Single or Double-Ended	Double-Ended
Doors	2 double-width doorways, 2 single-width doorways, each side
Nominal OCS Voltage	750V
Vehicle Maximum Line Current	TBD, along with capabilities for current limiting.
Minimum Horizontal Radius (In Service)	59 ft (18 m). On-board lubricators provided
Minimum Vertical Radii	820 ft (250m) Crest and 1148 ft (350m) Sag
Combined Vertical and Horizontal Radii	1640 ft (500m) Crest and Sag on a horizontal curve with a radius less than 95 feet.
Gradeability	Sustained (>2,500 ft) 7%; Limited sustained (up to 2,500 ft) 7.5%; Short sustained (up to 500 ft) 9%; Vehicle must be able to ascend and descend under all load conditions. Parking brake to be capable of holding Vehicle on worst-case grade.
Maximum Operating Speed	44 mph (70 km/h)
Track gauge:	56.5 inches (1435 mm)
Number of trucks:	2
Type of truck (fixed or rotating):	Fixed trucks
Wheel back-to-back distance:	54.2 inches (1376 mm)
Wheel contour (profile):	X.06.00455 (See Figure 8.1)
Maximum tolerable track twist for Vehicle:	1:400

Deleted: *DRAFT*

Deleted: *Downtown*

Deleted: Preliminary

Deleted: vVehicle will be a

Deleted: is a

Deleted: This vehicle is the same vehicle currently in service on the existing streetcar line.

Deleted: The vehicle uses fixed trucks (limited rotation relative to the carbody), which has implications for several aspects of the wheel-rail interface, including elevating the importance of using spiral transitions in all mainline track curves.

Deleted: Preliminary

Deleted: which the proposed

Deleted: *DRAFT*

Deleted: *Downtown*

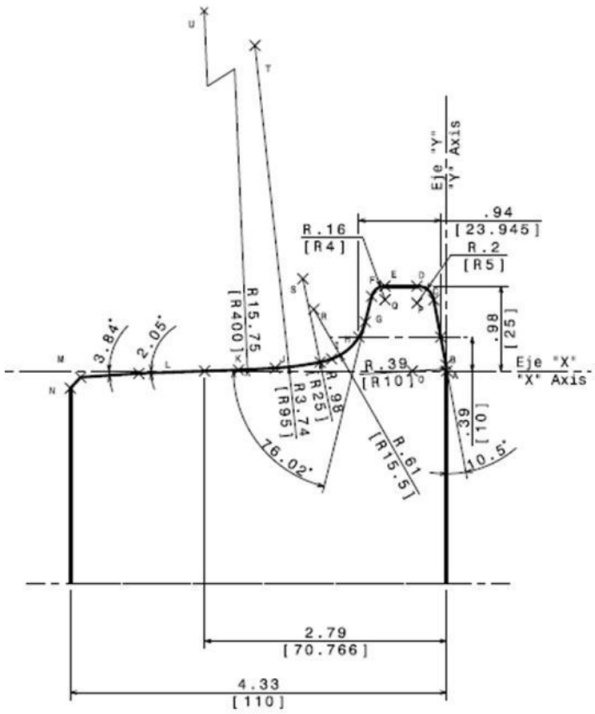

Figure 8.1 – Wheel Profile, X.06.00455

8.2 Vehicle / Platform Interface

The streetcar system will utilize fully-level boarding for the center doors on the vehicle, providing an ADA-compliant interface between the platform and the vehicle's accessible doorways. This will require the vehicle to be equipped with an automatic load-levelling system that maintains a fixed distance between the vehicle running gear and the vehicle floor under all conditions of passenger loading. The load-levelling system automatically adjusts the floor height whenever the vehicle stops at a platform. For fully-level boarding to be successfully implemented over the life of the system, strict construction and maintenance tolerances will also be required on the infrastructure side.

The outer doors of the vehicle will be accessed via near-level boarding platforms. The aisles within the vehicle that access these doors do not meet ADA compliance and therefore do not require fully-level boarding.

The vehicle supplier, streetcar infrastructure designers and construction contractors are required to communicate and cooperate in order to ensure a successful vehicle/platform interface that complies with ADA requirements. All parties recognize that the accuracy of the vehicle / platform interface for fully-level boarding over the life of the system is dependent upon

Deleted: *DRAFT*

Deleted: *Downtown*

both wayside and vehicle factors, and that agreement is required on the respective tolerances for each.

All platforms on the initial phase of the system are located along embedded track. If any future platforms are to be located on open (ballasted) track, additional considerations are required to ensure that the relationship between platform and track remains within tolerances over the life of the system.

8.3 Horizontal Gap

The dimension "vehicle width (over sides)" is measured over the widest portion of the sides, excluding mirrors, camera housings, and door threshold extensions. The dimension "vehicle width (over door threshold extensions)" is wider, and is the dimension used as the basis for coordination on horizontal gap.

The nominal horizontal gap between the platform edge and the edge of the vehicle door threshold extensions is agreed upon as 2.0 in (51 mm) and in no case shall be greater than 3.0 in (76 mm) nor less than 1.5 in (38 mm), including platform edge tolerance of +0.0 / -0.375 in (+0 / -9.525 mm).

The platform edge to track centerline dimension is to be finalized based on consultation with the vehicle supplier, streetcar infrastructure designers and construction contractors. Factors to be considered include vehicle width at the door threshold extensions, vehicle suspension system tolerances (including suspension failure conditions), and platform construction and maintenance tolerances.

8.4 Vertical Step

The nominal vertical step between the platform horizontal surface at the platform edge and the vehicle floor surface at the doorway for level boarding shall be 0 inches (0 mm) and in no case shall be greater than 0.625 inches (15 mm). For near-level boarding portions, the nominal vertical step between the platform horizontal surface at the platform edge and the vehicle floor surface at the doorway shall be 7 inches (178 mm) Platform height tolerance shall be +0.25 / -0.25 in (+6.00 / -6.00 mm).

Agreement is required between the vehicle supplier, infrastructure designers and construction contractors with regard to the construction and maintenance tolerances for platform height relative to top of rail, vehicle suspension system tolerances and range of wheel wear, and the operational range of the vehicle's load levelling system.

8.5 Weight and Passenger Loading

Vehicle weights are defined as shown in Table 8-2. Weight of each passenger or Operator is 154 lbs. (70 kg.) All weights are based on a complete vehicle in ready-to-run condition, including all equipment, materials, fluids, with wheels and other wear parts in new condition.

Vehicle weight should be verified during procurement of additional vehicles.

Table 8.2 – Vehicle Weights

Term	Definition	Weight
AW0 (empty load)	Empty weight of a ready-to-run Vehicle	76,850 lbs (34,860 kg)

Deleted: Weights shown are preliminary, actual weights will be included once vehicle selection is finalized.

Deleted: ¶

Deleted: Preliminary

Deleted: *DRAFT*

Deleted: *Downtown*

Deleted: Preliminary

Term	Definition	Weight
AW1 (fully seated load)	AW0 + the weight of a fully seated load of passengers and one (1) Operator	80,710 lbs (36,610 kg)
AW2 (system load)	AW1 + the weight of a standing load of passengers calculated at a density of 4 passengers per m^2 of suitable standing space (2.7 ft^2 per passenger)	99,690 lbs (45,220 kg)
AW3 (crush load)	AW1 + the weight of a standing load of passengers calculated at a density of 6 passengers per m^2 of suitable standing space (1.8 ft^2 per passenger)	109,260 lbs (49,560 kg)

8.6 Axle Load

The maximum static axle load at AW3 Crush is estimated to be 27.3 kips (12.4 metric tons) on level, tangent track.

AW4 weight is used only for carbody structural calculations and can be obtained from the Vehicle Technical Specification if needed.

8.7 Dynamic Envelope

Table 8-1 gives major Vehicle dimensions. The Vehicle Supplier is required to work with the City to ensure that all wayside elements are dimensionally compatible with the Vehicle. The preliminary dynamic envelope and curve offset drawings are provided in Table 2.2.1.1b.

Deleted: are attached

Deleted: Once vehicle selection is finalized, this section will be updated.

Deleted: *DRAFT*

Deleted: *Downtown*

THIS PAGE INTENTIONALLY LEFT BLANK

Deleted: *DRAFT*
Deleted: *Downtown*

9.0 VEHICLE MAINTENANCE FACILITY

Deleted: MAINTENANCE AND STORAGE

9.1 General

The Vehicle Maintenance Facility (VMF) will perform daily and routine inspections, maintenance, on-car repairs, and interior/exterior cleaning of the streetcars. The facility will also serve as a storage and component change-out location and house administrative and operations staff needed to support the streetcar system.

Deleted: Maintenance and Storage
Deleted: MSF

Component rebuild, truck overhaul, body repairs, machine shop work, and sheet metal work will be performed at this location. Major car overhaul and body painting will be accomplished by contracting those services out to other facilities. Wheel truing may be performed at the VMF or be contracted out to other facilities.

Deleted: MSF

The Vehicle Maintenance Facility (VMF) must be designed to achieve LEED Gold or higher certification for New Construction.

Deleted: Maintenance and Storage
Deleted: MSF
Deleted: a
Deleted: certification of Gold or higher

The Vehicle Maintenance Facility (VMF) must allow for fleet expansion and development potential.

Deleted: Maintenance and Storage
Deleted: MSF

9.2 Applicable Codes and Standards

Design requirements for the shop and yard shall comply with all federal, state, and local laws, regulations, rules, requirements, and the preservation of natural resources as well as all laws, ordinances, rules, regulations and lawful orders of any public entity bearing on the performance of the work. Listed below are the principal applicable codes – their latest editions must be consulted for design:

- International Fire Code (IFC)
- International Building Code (IBC)
- International Energy Conservation Code, and any supplements International Mechanical Code
- International Code Council Performance Code
- Missouri State Plumbing Code
- National Electrical Code (NFPA-70)
- Telecommunications Industry Association/Electronic Industries Alliance (TIA/EIA)
- Underwriters Laboratory (UL)
- Telecommunications Distribution Methods Manual (TDMM)
- Building Industry Consulting Services International (BICSI)ASME A18.1 Safety Code for Platform Lifts and Stairway Chairlifts
- Kansas City, Missouri Building Construction Code - Administrative Provisions
- Federal OSHA requirements
- National Electric Safety Code (NESC)

Deleted: *DRAFT*

Deleted: *Downtown*

- Uniform Plumbing Code (UPC)
- American National Standard Code for Elevators
- American National Standards Institute, Inc.
- Americans with Disabilities Act (ADA)
- USGBC/LEED
- US Department of Transportation Transit Security Design Considerations, Final Report November 2004
- Kansas City Zoning and Development Code Guide

9.3 Materials

9.3.1 Exterior

The exterior materials to be used on the facility are to be selected based on durability, appearance and compliance with KCMO requirements for the development. The goal is to establish a facility that will provide 30 to 50 years of a low maintenance, pleasing appearance and fit in KCMO's plans for the local area.

Where exposed to direct sunlight, energy efficient glass is to be used. Exterior wall and roof areas are to be insulated to meet current energy codes. Roof materials shall be selected based on long-term durability and appearance.

9.3.2 Interior

The emphasis on material selection for the interior of the facility is on durability and low maintenance.

Finishes should be as follows:

- Sealed concrete floors in shop areas and storage rooms;
- Wall areas in shops shall have a minimum 8 foot high concrete or concrete block wainscoting. Alternatively, if a pre-engineered building is selected, provide a minimum 8' high plywood wainscoting;
- Office areas shall be 3 5/8 inch metal studs and 5/8 inch gypsum-board construction with sound batt insulation. Ceilings shall be acoustical ceiling tile with regress trim for 70% of the facility; the remainder shall be gypsum wallboard. Offices shall be carpeted. Sound insulation shall be provided between adjacent office spaces;

Toilet/shower areas shall have ceramic tile floor and wall finishes to 6 feet above finished floor.

9.4 Functional Requirements

The VMF shall house the following functions:

Deleted: MSF

- Streetcar storage and streetcar parts storage;
- Operator report and break area;
- Operator and maintenance training;
- Streetcar service and inspection;

Deleted: *DRAFT*

Deleted: *Downtown*

- Streetcar interior and exterior cleaning;
- Streetcar air-conditioning, current collector and resistor unit repair;
- Facilities maintenance;
- System-wide parts storage;
- Streetcar operations administration;
- Streetcar maintenance administration;
- Local Central Control;
- Electronic component repair;
- Communications equipment repair, storage and inspection;
- Storage of streetcar maintenance-of-way (MOW) materials.

9.4.1 Streetcar Shop Functional Requirements

The following general streetcar maintenance functional requirements have been established for the shop, and shall dictate the types of service and repair facilities to be provided:

- Service, remove and replace car pantograph assemblies
- Service, remove and replace car HVAC units
- Exchange of trucks
- Exchange of defective components with new or rebuilt parts
- Streetcar modifications
- Repair of miscellaneous system equipment and components
- Running repair
- Periodic and preventative maintenance
- Air-conditioning unit secondary maintenance and overhaul
- Safety inspections
- Interior and exterior cleaning
- Sand box filling
- Loading/off-loading equipment to/from rail bound equipment, if applicable
- Wheel and component replacement on axles
- Minor paint and body repair
- Tire replacement on wheels

9.5 Site

9.5.1 Selection

Site selection criteria include the following:

Deleted: *DRAFT*

Deleted: *Downtown*

- Site Size: The VMF site shall be of sufficient size to permit the construction of the facilities necessary to support the initial and ultimate revenue service, fleet sizes, and maintenance functions for the planned streetcar system.

Deleted: MSF

- Site Location: The selected sites shall be located to provide convenient access to the main line with a minimum of deadhead mileage. The site selection process shall include consideration of land use, zoning, adjacent properties, land acquisition, adaptability, configuration, clearing/grading, drainage, existing utilities, and construction costs.
- Environmental Impact: The selected sites shall comply with all environmental requirements minimizing the negative impact on adjoining land. Considerations shall include air and noise pollution, traffic, aesthetics, social, economic, and safety.
- Site Configuration: Configuration of the Yards and Shops shall permit a functionally efficient layout to provide vehicle storage and work flow that minimizes streetcar and personnel movement requirements. The site should be level in order to store and maintain streetcars without the danger of a car rolling down any grades on the site or toward the main line. The site should accommodate positioning of the shop and yard trackwork in such a manner to preclude entrapment of cars from access to the storage yard, shop, or mainline.

9.5.2 Planning

The VMF layout shall include:

Deleted: MSF

- Open Yard
  - Streetcar storage;
  - Streetcar exterior or covered wash area
  - Automobile parking, service and access roads
  - Outside storage area for MOW and traction power equipment
  - Fire protection system
  - Yard Lighting
  - Security fences and gates
  - Refuse collection locations
  - Landscaping
- Streetcar Maintenance of Equipment Shop
- Operations Administration Offices

9.6 Electrical Services

A separate Traction Power (TPSS) substation shall be provided for the shop with shop tracks electrically isolated from the yard and mainline tracks. KCP&L will provide service to the new TPSS via an underground primary service located as close as possible to the TPSS. Overhead wire in the yard and over the individual shop car positions shall be sectionalized to allow the shutdown of power to the individual car positions in the shop and tracks in the yard without affecting the remainder of the shop or yard. Individual, lockable, manual disconnects shall be provided for each section isolation switch to remove traction power when required for maintenance. The shop substation will be solidly grounded to the building ground network for safety purposes.

Deleted: *DRAFT*

Deleted: *Downtown*

A separate yard substation will be provided, with yard trackage electrically isolated from Maintenance Facility. Refer to the Traction Power Supply and Distribution in Chapter 10.

One hundred twenty volt (120V) single-phase, and 208V 3-phase service shall be provided to operate small HVAC, machinery, office equipment and communication equipment all up to ½ hp. Incandescent and fluorescent lighting shall be 120 V AC for normal lighting and 125 V DC for emergency egress lights. Fluorescent lighting may be 277 V AC. All motors and machinery 3/4 hp and over shall be supplied at 480V, 3-phase.

An alternate power source shall be provided for the VMF. Required egress lighting, access, data, fire alarm, security, and similarly required systems will be provided with an alternate (backup) power source to support the requirements for such systems.

A Lightning Risk Assessment should be conducted to evaluate the VMF's protection against a strike.

9.7 Interior Lighting

General light levels shall be as follows:

- Shop Areas 50-70 fc
- Pit Areas 100 fc
- Storage Areas 30 fc
- Office Areas 30-50 fc
- Lobby, Break, Restrooms, Lockers, Stairs, and Corridors 5-10 fc

Lighting for specific task areas is to be located and designed to meet task requirements.

Shop areas shall utilize high bay type fluorescent fixtures.

Energy-saving lighting systems and fixtures shall be used where possible and shall comply with LEED criteria.

Natural light from skylights, windows, and clerestory windows (including those in maintenance bays) shall be maximized to reduce dependence on light fixtures during daylight hours.

Pits shall have lights along both sides aimed upward for under-car lighting with a lens on the bottom for floor lighting.

Emergency egress lighting will be provided per NFPA 101, Life Safety Code requirements.

Deleted: *DRAFT*

Deleted: *Downtown*

9.8 Acoustics

In planning the new facility, noise- and vibration-generating equipment such as air compressors and pumps shall be located away from office areas and/or acoustically isolated. HVAC mechanical units shall be located and specified so that noise and vibration transmission is minimized. In addition, walls, ceilings, and floors in these spaces shall be insulated to further reduce noise transmission to other parts of the facility.

9.9 Maintenance

In planning the new facility, proposed maintenance procedures shall be reviewed and staff operations personnel shall be consulted to ensure that the new facility provides an efficient work environment. Janitorial closest and other maintenance rooms shall be located convenient for users. Floor drains, hose bibs, etc. shall be located for convenience of use.

9.10 Mechanical systems

Shop areas shall be heated and cooled. The HVAC system shall be designed in zones. Maintenance pits shall have a section of wall-mounted hot water radiant heat. Pit areas shall have exhaust air ducts at side walls. Shop compressed air shall be available in all pits at convenient intervals to operate tools.

Electronics storage areas shall have a split system A/C to mitigate against excessive humidity levels.

Office, administration, support, and Central Control areas shall have forced air heating, ventilating, and air conditioning systems. The HVAC system shall be designed in zones appropriate for use and exposure to heating and cooling demands. The shop substation electrical room shall be air conditioned and vented with exhaust fans.

9.11 Security

Operations facility security shall be achieved by fencing the periphery of the yard, lighting, and video surveillance. The fences shall be in accordance with zoning requirements between 6 and 10 feet in height. Card readers will be on all exterior doors with intrusion door alarm switches. Electronic locksets will be on all exterior and interior doors, with proximity card readers. Gates shall be provided at all yard track and road accesses and shall provide for minimum interference to streetcar movement. Exterior cameras shall be commercial grade and mounted to monitor exterior building entry points. The control room shall be equipped to monitor the video images concurrently. Security lighting shall be placed as necessary to supplement the normal area outside work lighting.

9.12 Corrosion Control and Safety Grounding

The maintenance facility shall have an equipotential grounding system for all conductive surfaces exposed to human contact. This shall be accomplished through use of a building perimeter ground. The perimeter ground shall be bonded to ground rods and bonded to the metal structure of the building and reinforcement bars of the concrete. The reinforcing steel of the main shop floor shall be bonded into a grid pattern and all shop conductive surfaces shall be bonded to the grid. The shop trackwork shall be continuous and bonded to the grid. The shop grid and perimeter ground shall be bonded to the shop substation negative return. Insulated rail

Deleted: *DRAFT*

Deleted: *Downtown*

joints shall be located in the ends of the concrete aprons, which will define the extent of the shop grounding system and DC electrical system.

In order to minimize the effects of DC stray currents, ferrous pipe shall be coated with an electrical insulating material and tested prior to burial. Some underground services (such as natural gas) may be better served by use of plastic pipe where the code allows. Joints in piping will require bonding in some locations and insulated joints in others. Refer to Chapter 15, Stray Current and Corrosion Control, of these Criteria.

9.13 Fire Protection System

Fire protection utilities such as hydrants, sprinklers in the building, and extinguishers shall be provided in accordance with local agency having jurisdiction in effect at the time of construction of the facility. The hydrants shall be located so as not to block the movement of streetcars when fire hoses are being used.

A fire sprinkler system shall be provided throughout the building in compliance with jurisdictional requirements. The system shall be of the dry type in areas prone to freezing and a wet system elsewhere. Chemical fire protection for areas such as electrical rooms, communications rooms, flammable storage, etc., may be necessary depending on local jurisdictional requirements. The system shall be held tight to the structure to avoid clearance problems.

9.14 Central Maintenance, Operations and Administrative Areas

Space shall be provided for the management of the maintenance shops, operations facilities, and administration. The space should be planned to house an adequate number of staff to operate and maintain the system, and provide coordination with KCATA, KCMO, and other agencies that interface with the streetcar system. A space planning needs analysis shall be conducted in the conceptual phase of the building design program.

9.15 Streetcar Wash Facilities

9.15.1 Exterior Streetcar Wash Facility

A car position exterior to the building shall be provided for washing the exterior of the streetcars. The car position shall accommodate single streetcars only. Infrastructure shall be provided to capture wash water and direct it to the sanitary sewer or be reclaimed to minimize fresh water use. A roof over the wash area may be necessary to assure that storm water does not enter the sanitary sewer.

9.15.2 Interior Cleaning Area

Cleaning of the interior of the streetcars will take place in the yard. This track may also be used to perform daily and scheduled maintenance and safety inspections of the streetcars.

9.16 Storage

9.16.1 Yard

Sufficient storage tracks or space for storage tracks shall be provided to accommodate the ultimate fleet size to be stored and maintained. The storage yard shall be arranged to provide

Deleted: *DRAFT*

Deleted: *Downtown*

space for all streetcars to be stored on level tangent track. Area around train storage should be level to facilitate safety of workers moving around the cars.

Track centers shall be 12 ft - 0 in minimum where no access aisle is required between tracks and 14 ft - 0 in minimum where a paved access aisle is required. OCS and lighting poles may be located between tracks with 14 ft - 0 in track centers when no access aisle is required.

The layout of the storage yard shall enable movement of streetcars to and from the shop, other yard facilities, and the mainline with the smallest possible number of reverse movements and crossovers, consistent with site space limitations. This shall be accomplished by avoiding the use of stub-end tracks and by proper relationship of yard track orientation to the mainline.

Storage yard tracks shall be embedded track At a minimum paving all walkways would be necessary, but in order to make the yard useful, paving all tracks is recommended. This is required in order to improve other vehicle access, reduce tripping and falling hazards, and mitigate dust. Paved Track will require a rail boot per 15.9.1.4

9.16.2 Outside Storage Areas

Outside storage space is recommended for the storage of the following types of equipment and structures: OCS poles and large OCS hardware, lighting poles, rail, ties, special trackwork (such as switches, switch stands, frogs, etc.), other track materials (such as insulated joints, etc.), and reels of OCS wire. Locations of these types of storage areas shall be coordinated with the City of Kansas City Missouri (KCMO).

9.17 Automobile Parking and On-site Roads

Automobile parking shall be provided for visitors and employees to a level adequate to satisfy City requirements. Access for truck deliveries shall be provided.

Service roads and/or aisles shall be provided around the shop and to outside storage areas within the yard.

9.18 Access for the Mobility Impaired

The facility shall be designed to meet applicable federal, state and local codes for accommodating access for the mobility impaired in effect at the time of facility design.

9.19 Yard Lighting

The yard shall be illuminated to provide a safe working environment for ultimate 24 hour operation of the facility. Yard lighting shall be provided to a level of 2 fc average, 4:1 average to minimum and 9:1 maximum to minimum for the entire site. Lighting shall be shielded so as not to spill on to neighboring properties. Light shall also conform to applicable LEED criteria.

9.20 Refuse/Recycling Collection

Refuse/recycling collection bins, dumpsters, etc. shall be provided at several locations convenient to work areas as well as to collection vehicles. Space allocation limitations associated with the shop and yard site may require the transfer of waste and recycled materials from local collection points to a central location.

Deleted: *DRAFT*

Deleted: *Downtown*

Certain containers shall be designated for recycling purposes, such as those used for metal waste, and for office waste paper, cardboard, glass, etc.

9.21 Landscaping

Landscaping shall be minimal but meet local land use requirements. The amount and type shall be consistent with the local development requirements for the site. Low maintenance ground cover material (gravel, bark dust, etc.) shall be provided on areas of the site not used for structures, track, or access roads and walkways. Water harvesting shall be implemented when appropriate and in coordination with LEED-BD+C guidelines.

Deleted: *DRAFT*

Deleted: *Downtown*

THIS PAGE INTENTIONALLY LEFT BLANK

Deleted: *DRAFT*

Deleted: *Downtown*

10.0 TRACTION POWER SUPPLY & DISTRIBUTION

10.1 General

This chapter establishes the design criteria for the Traction Electrification System (TES), which includes traction power substations, the DC feeder system, and the Overhead Contact System (OCS).

10.1.1 Definitions

Traction power substations (TPSS) are located along the system route and connected to the local power utility company. They include all equipment necessary to transform and rectify AC three-phase voltage to DC electrification voltage.

The DC feeder system includes the ducts, cable and/or overhead connectors from the substations to the trackside disconnect switches and the track rails.

The OCS distributes power supplied from the TPSS to the vehicles. It includes contact wires and their physical support.

10.1.2 System Description

The TES configuration shall have multiple substations with DC electrical continuity between substations.

The streetcar vehicle will collect power from the contact wire by means of a pantograph and will complete the negative return path of the power to the substation via running rails. During regenerative braking, power will be placed back into the system via the vehicle pantograph to the OCS.

Mainline and yard tracks will be isolated from ground. The Shop tracks will be solidly grounded.

The traction power supply system shall maintain the distribution system voltage above the minimum allowable value. The OCS shall be designed to allow the streetcar to operate with all pantographs in contact with the conductors up to the maximum allowable speed without excessive oscillations of the system and without pantograph bouncing or arcing.

Traction power and distribution system equipment shall be designed taking into account the effects of the harmonic content of the traction load, the highly fluctuating pattern of traction current, and system faults.

The TES shall be designed for a minimum functional life expectancy of 30 years before major overhaul or complete replacement becomes necessary; assuming that approved maintenance policies are followed.

10.1.3 System Load Flow Simulation

The design of the Traction Electrification System shall be based on a computer-aided load flow simulation. The trains shall be simulated to operate on the system for the following schedules:

Deleted: *DRAFT*
Deleted: *Downtown*

- Ultimate design capacity assuming the heaviest projected schedule under normal and contingency conditions. The addition of future line extensions shall be considered in the design.

- Minimum Signal System design headway under normal operation and contingency conditions.

- Single-outage condition will be the contingency condition for load flow simulation. Defined as one TPSS out of service at any time.

10.1.4 Design Parameters

System Voltages

Maximum System Voltage	950 VDC
Substation Voltage at 100% Load (Full Load)	750 VDC
Regulation	4% - 6%
Minimum System Voltage	525 VDC

Rail-to-Ground Voltages

Maximum Rail-to-Ground Voltage	50 VDC

10.1.5 Design Environment

The traction power distribution system will be designed to operate continuously and satisfactorily under the environmental conditions described in Chapter 1, General.

10.1.6 Codes and Standards

All design work and material selection shall conform to or exceed the requirements of the latest editions of standards and codes issued by the following organizations:

- Association of American Railroads (AAR)
- American Railway Engineering and Maintenance-of-Way Association (AREMA)
- American National Standards Institute (ANSI)
- American Society for Testing & Materials (ASTM)
- Institute of Electrical & Electronics Engineers (IEEE)
- National Electrical Manufacturers Association (NEMA)
- Insulated Cable Engineers Association (ICEA)
- American Society of Mechanical Engineers (ASME)
- Underwriters Laboratories (UL)

Deleted: *DRAFT*

Deleted: *Downtown*

- National Fire Protection Association (NFPA)
- National Electrical Testing Association (NETA)
- National Electrical Code (NEC), where applicable
- Applicable State, Local, and County Codes
- National Electrical Safety Code (NESC)
- International Code Council/American National Standards Institute (ICC/ANSI) A117.1.1-03
- Federal Transit Administration Regulation 49 CFR Part 37

10.1.7 Integration into Systems and Operating Plan

The traction electrification design shall be coordinated with streetcar civil design, other systems design (vehicles, signals, communication) and the Operating Plan.

10.2 Traction Power Substations

10.2.1 Substation Description

The TPSS design shall include the following elements: substation housings, AC switchgear, transformer/rectifier units, DC switchgear assemblies, negative return system, protective systems, annunciation, intrusion detection systems and Fire Alarm System, auxiliary power supply systems, busbars, grounding systems, ventilation and air conditioning systems, batteries and chargers, lightning arresters, metering equipment and auxiliary power for non traction loads where required.

Substations will be standardized in size and configuration where possible to minimize maintenance, inventory of parts, and to allow for full compatibility and interchangeability of equipment between substations.

10.2.2 Substation Structure or Enclosure

The substation equipment shall be housed either in buildings, electrical equipment rooms, or in weatherproof factory-built packaged substation structures.

A paved or concrete sidewalk or ramp at ground level shall be provided outside the substation to allow removal and replacement of heavy equipment.

Steps shall be provided for access to substations.

Substations shall have adequate area to accommodate all the electrical equipment and ancillary components.

Ceiling heights, structural openings, and door openings shall permit entry and removal of the largest components installed in the structure.

Two exit doors with panic hardware, one at each end of the substation, shall be provided.

Deleted: *DRAFT*

Deleted: *Downtown*

Insulation of walls, ceilings and floors sufficient to prevent condensation, dust especially from the roof, shall be provided. Insulation may be fiberglass batting in the walls and solid insulation on the roof.

Portions of the substation building floor shall be coated with ¼ inch epoxy material and walls with ¼ inch insulated sheeting to insulate and electrically isolate the dc switchgear from any grounded objects.

Adequate space heating shall be provided to prevent condensation in electrical equipment. Minimum permissible inside temperature is 40° F.

Adequate air conditioning and ventilation shall be provided to prevent damage to the equipment. Maximum permissible inside temperature shall be 90° F.

Lighting levels shall be designed for 50 to 70 foot-candles, average. Emergency lighting shall be provided with 2 foot-candles minimum at floor level for 1.5 hours. Exterior luminaires shall be provided and be photo-electric controlled.

Provide a distribution panelboard for installations that feed other buildings, rooms or a passenger station platform. Provide an ac panelboard for the substation auxiliary equipment, lighting, convenience receptacles, and HVAC.

10.2.2.1 Substation Structural Requirements

Design enclosure in accordance with local building codes to withstand live roof loading, wind loading, wind loading, and seismic loading based on service conditions in the Specifications.

10.2.3 Substation Foundation

The substation foundation will conform to established civil and structural engineering practices, ASTM and ACI standards as well as other applicable standards and local codes. The foundation design will be coordinated with the electrical design for the incoming and outgoing conduit interfaces. The substation foundation will be capable of withstanding the live and dead loads of the substation equipment during fault conditions as well as normal operation and maintenance procedures.

10.2.4 Substation Spacing and Location

Locations shall be based on the System Load Flow Study. Substations shall be located such that the following requirements are met:

- Distribution system DC voltages do not drop below the minimum level required
- Temperatures of distribution system conductors do not exceed the allowable maximum
- Rail voltages do not exceed the maximum permissible values

Locations shall be sensitive to real estate and other cost considerations.

10.2.5 Substation Equipment Rating

The continuous rating of substation equipment such as the traction transformer, rectifier, circuit breakers, and cables shall be based on the System Load Flow Study.

Deleted: *DRAFT*

Deleted: *Downtown*

Each mainline substation shall be capable of supplying the extra heavy-duty traction power service in accordance with IEEE 1653.2.

10.2.6 Substation Incoming Service

Incoming primary ac power to the Traction Power Substations will be supplied by the local serving utility. If possible, adjacent traction substations should be supplied from separate utility substations or from different buses of the same utility substation.

10.2.7 AC Switchgear

The AC switchgear assembly shall be rated for the utility supplied voltage.

The assembly shall provide the means to deliver, control, and measure the substation power requirements.

The assembly shall be housed in dead-front enclosures containing AC draw-out vacuum circuit breaker, solid state relaying/protective devices, metering equipment, and auxiliary power supply. Drawout switchgear shall be provided to allow removal and testing of the AC circuit breaker when withdrawn from its cubicle.

10.2.8 Rectifier Transformer

The rectifier transformer shall be copper wound vacuum pressure impregnated dry-type (VPI), self-cooled Class AA, with the primary voltage to be consistent with utility supply and equipped with five taps, two above and two below nominal voltage with 2.5% between each tap. Provisions shall be included for future addition of fans for increasing the output above the specified base.

The transformer/rectifier shall have overall regulation of 4 - 6 percent ± 0.5 percent between 1 percent rated load and 100 percent rated load.

The transformer shall be rated extra heavy traction based on IEEE 1653.2.

10.2.9 Rectifier

The rectifier shall be of uncontrolled design and naturally convection-cooled. Provisions shall be included for future addition of fans for increasing the output above the specified base.

Each rectifier shall be a complete operative assembly consisting of the rectifier elements, heat sinks, internal buses, connections, fuses, and all other necessary components and accessories.

Rectifier shall consist of full wave bridges providing 6 phase 12-pulse ANSI 31 circuit rectification.

Rectifier for shop substations may be 3 phase 6-pulse rectification.

Rectifier shall be provided with an interphase transformer for 12-pulse ANSI 31 circuit rectification.

10.2.10 DC Switchgear Assembly

The DC switchgear assembly shall form a lineup of dead-front metal enclosures.

Deleted: *DRAFT*

Deleted: *Downtown*

The DC circuit breakers shall be draw-out, single-pole units.

Main DC disconnecting means shall be provided in each line up. Disconnecting means may be by a circuit breaker or a no-load break switch. The positive and negative switches shall be interlocked to prevent opening or closing of both unless the AC main circuit breaker is open.

Rail grounding devices shall be provided with grounding clamp device.

10.2.11 Negative Return

The negative return shall include negative disconnect switches, negative busbar, terminations for negative return cables and other associated equipment.

10.2.12 Protective Devices

Based on the magnitude of load, overload, and short circuit currents, a comprehensive protective scheme shall be designed to protect the substation equipment, the feeders, and the OCS, as well as provide back up for the transit vehicle protective devices.

Protective relays shall be high quality solid state utility-type devices enclosed in rustproof, dust-proof cases with test switches.

Protective relays shall be self-resetting and shall have seal-in, hand-resetting targets indicating relay operation.

Relays shall be arranged to be visible, accessible for maintenance, and logically grouped, with devices of related functions located in proximity to each other.

Transfer tripping of substations adjacent to the section where a fault is detected shall be provided.

Annunciation with acknowledge and reset functions shall be provided.

10.2.13 Emergency Trip Stations

Each substation shall be equipped with traction electrification emergency trip stations (ETS).

Actuation of the ETS shall trip the incoming AC breaker and DC feeder breakers at the substation.

10.2.14 Local and Remote Control and Annunciation

Substations shall be equipped with a local control and annunciation system and provision for a remote control and annunciation system through future SCADA.

Alarm functions shall include at minimum: unauthorized entry, fire and smoke alarms.

10.2.15 Auxiliary Power

Each TPSS shall be furnished with a battery charger/eliminator and DC distribution panelboard, which shall be sized to supply all substation control power loads.

Batteries shall be Ni-Cad.

Deleted: *DRAFT*

Deleted: *Downtown*

Secondary AC power may be supplied to both the substation facility loads and other loads at the building site. All transformers within the TPSS shall be VPI. Separate AC panelboards shall be provided for substation facility loads and other loads.

The voltage for auxiliary equipment shall be 120/240V, 1-phase, 208Y/120V, 3-phase or 480Y/277V 3-phase and shall be the same throughout the project.

10.2.16 Busbars and Bus Connectors

Busbars and bus connections shall be designed to withstand the thermal and mechanical stresses occurring during the specified load cycle and the rated short circuit currents, without damage to the bus, bus supports, or enclosure.

Busbars shall be rigid, high electrically conductive copper.

Busbars shall be adequately insulated and braced with high-strength insulators.

Bus connections shall be bolted and furnished with silver-plated surfaces. Each joint shall have conductivity at least equal to that of the busbar. A minimum of two bolts shall be provided for each bus connection with four bolts for larger busbar joints.

10.2.17 Miscellaneous Equipment

Each TPSS will be equipped with appropriate equipment such as a fire extinguisher and a tool cabinet furnished with a set of special tools necessary to maintain the equipment.

10.2.18 Equipment Arrangement

Spacing and positioning of each item of equipment shall permit maintenance, removal, and replacement of any unit without the necessity of moving other units.

The arrangements of the equipment shall permit doors to be opened, panels to be removed, and breakers to be withdrawn without interference to other units.

10.2.19 Substation Grounding

Each traction power substation shall be provided with a ground mat.

The ground mats shall be constructed of bare copper or “Copperweld” conductors and ground rods exothermically welded together. Pressure connected joints will be considered for special applications.

Grounding connections shall carry the rated short circuit current. Minimum size of grounding conductors shall be 4/0.

Ground mat conductors shall be totally encased in native soil. If possible, a layer of coarse, clean, crushed gravel, free of fines and debris, shall be placed over the soil. A surface layer over the gravel may be asphalt, masonry, or concrete.

The ground mat shall be designed to protect personnel from step and touch potentials, which may arise under substation fault conditions, and to meet the requirements of the IEEE Standard 80. The mat shall be used to solidly ground traction power transformer enclosures, auxiliary power transformer neutrals, building and doorframes, ac switchgear enclosure, and low voltage

Deleted: *DRAFT*

Deleted: *Downtown*

panels. The ground mat is recommended to extend 5 feet beyond metallic fences but no less than 3 feet, if provided.

The DC switchgear enclosure, including the rectifier and negative cubicles shall be connected to the substation ground through a high resistance ground relay.

The utility ground conductor shall be grounded to the TPSS station ground mat.
Grounding grid shall be connected to TPSS bus by four individual connections.

Ground electrode resistance shall be 5 ohms or less.

10.2.20 Underground Distribution Feeders

Underground distribution feeder cables shall be insulated to 2 kV minimum and sized according to the System Load Flow Study.

10.2.21 Metals and Finishes

Exteriors shall be heavy 11 gauge galvanized or galvanneal metal. Interior equipment shall be 11 gauge steel. Equipment and exteriors of buildings may be painted or coated using polyester triglycidyl isocyanurate.

10.2.22 Site Improvements

KCMO will specify the requirements for site layout, building access, pedestrian and maintenance vehicle access, site utility, conduit and cable interface requirements and any site enhancement requirements.

10.2.23 Noise Levels

The substation sound level will meet the requirements of codes and standards of local ordinances and industrial norms for equipment of this type.

10.2.24 Control and Indications

The TPSS will contain an enclosed self-ventilating local control panel to centralize the local and remote control and indication functions. The control panel will be LED panel type or LCD type, which can include the controls on touch screen. The local control panel will house the annunciator, metering equipment, control switches, and provisions for interfacing with a future SCADA System.

10.3 DC FEEDER SYSTEM

The DC feeder subsystem shall include all feeder conductors, jumpers, cable ducts and raceways, and associated hardware that feed the dc power to the OCS, and the return current conductors, rail, and connections to the negative bus in the substation.

10.3.1 Feed/Return Cable

DC feed and return cables shall be sized for the anticipated RMS loads. Each circuit shall consist of a number of copper cables. Cable insulation shall be rated 2 kV minimum. Cable shall be Ethylene Propylene Rubber (EPR) insulated, non-shielded.

Deleted: *DRAFT*

Deleted: *Downtown*

10.3.2 Cable Ducts and Raceways

Cable ducts and raceways for DC circuits shall consist of one or more PVC conduits, sized for the cables to be installed, protected by a poured concrete duct bank, as appropriate.

Conduit stub-ups, and stub-outs from concrete, shall be PVC coated galvanized steel, if exposed. PVC is acceptable if the stub-ups and stub-outs are enclosed.

DC positive and DC negative traction power cables shall be shall be fireproofed in all manholes, handholes and switchgear.

10.3.3 Lightning Arresters and Surge Arresters

Over-voltage protection for the traction power system shall be provided by lightning arresters and surge arresters.

Arresters shall be rated to withstand the maximum system voltage regeneration and anticipated voltages induced from paralleling high-voltage transmission lines.

Arresters shall be capable of discharging the energy resulting from lightning strikes or other excessive surges.

At a minimum, lightning arresters or surge arresters shall be installed at feeder terminations located adjacent to each substation, each OCS bypass switch, substation feeder switches and 1,000 feet either side of the substation and in areas of reduced clearances, such as overhead bridges and tunnel portals. Surge arresters shall also be installed midway between substations.

Surge arresters will be installed in all substations on each outgoing feeder external to switchgear preferably in an adjacent area and between the negative bus and the ground.

Surge arresters will be installed in all substations on the primary of the rectifier-transformer in the rectifier transformer compartment with a shield protecting the transformer windings.

10.3.4 Disconnect Switches

Disconnect switches will be mechanically operated switches mounted on OCS poles or pad mounted enclosures wherever possible. Switches located in areas accessible by the public will be provided with locking mechanisms to guard against unauthorized operation.

10.4 OVERHEAD CONTACT SYSTEM (OCS)

10.4.1 General

The overhead contact system includes the contact wire system and the physical support system. Technical, operational, maintenance, local climatic and economic considerations will be the basis of design of the OCS as well as environmental conditions discussed in Chapter 1, General.

The contact wire system consists of the contact wire; in-span fittings; jumpers; conductor terminations and associated hardware from which the vehicle draws power by means of the

Deleted: *DRAFT*

Deleted: *Downtown*

physical contact of the pantograph on the contact wire. Design of the contact wire system will be interfaced with the vehicle dynamic performance characteristics in order to develop a system in which the pantograph maintains contact with the contact wire for proper current collection under all operating conditions; see Chapter 8, Vehicle.

The physical support system consists of foundations; poles or masts; guys; insulators; brackets; cantilevers; and other assemblies and components necessary to support the contact wire system in accordance with the requirement that contact will be maintained during all operating conditions. The support system will be double insulated throughout the OCS.

The feeder system consists of the feeder conductors; jumpers; switches; and associated hardware that connect the TPSS DC positive feeders to the contact wire.

The traction power distribution system will be electrically continuous from substation to substation. At the TPSS, the OCS continuity can be sectionalized to provide isolation of each electrical section. An arrangement providing continuity and flexibility for sectionalization of the OCS while any track is out of service will be incorporated in the design. Sectionalization at switches or other special trackwork locations as well as in the yard can be required to provide flexibility in operations and maintenance.

In locations where it is required to have an insulated separation in the contact wire, such as at special trackwork, jumpers, switches, or breakers will be employed to maintain electrical continuity. Where jumpers are used, they will be sized to provide the same ampacity as the contact system.

10.4.1.1 OCS Configuration

For all mainline at-grade and aerial structures, the OCS will consist of a fixed termination (variable tension) single contact wire system, consisting of a contact wire supported by means of cantilevers, cross spans, head spans, and pull-off arrangements. The system will be supported by poles located curbside outside the track areas for the mixed traffic alignment sections or between the tracks in two track areas for the semi-exclusive alignment sections. The use of building mounted anchor points will be encouraged when possible. In multi-track areas, a head span configuration may be employed.

If the OCS requires parallel feeders they will be run underground. Choice of center or side poles will be determined on a site specific basis. Street lights may also be supported from OCS structures.

The yards and shop area will also contain a single wire fixed termination system. Depending on yard layout, the contact wire in the yard will be supported by a single or back to back pole mounted cantilever arms, cross spans or head spans. Contact wire supports in the shop will be attached to the building structure.

10.4.1.2 Design Coordination

The OCS will be designed in accordance with the criteria in Chapter 2, Track Alignment and Trackwork; and Chapter 8, Vehicle.

Deleted: *DRAFT*

Deleted: *Downtown*

10.4.2 Design Requirements

10.4.2.1 Contact Wire Height

The nominal contact wire height will be in accordance with the requirements listed in Table 10.1 below. Note that minimum is the minimum height allowed under worst case conditions of temperature, sag, tension, construction tolerances and maintenance tolerances.

Table 10.1 – Contact Wire Heights

Route Description	Type of OCS	Minimum Contact Wire Height	Normal Wire Height
Low Clearance Areas (i.e. tunnels)	Fixed Termination Single Contact Wire	13' 6"	14' 6"
Yard	Fixed Termination Single Contact Wire	16' 0"	19'0"
Segregated Right of Way	Fixed Termination Single Contact Wire	15' 0"	19' 0"
Railway Grade Crossing	Fixed Termination Single Contact Wire	22' 0"	22' 0"
Mixed use, with road vehicles	Fixed Termination Single Contact Wire	18' 0"	19' 0"

The contact wire height at supports will take into consideration the effect of wire sag, due to temperature rise or to ice loading, and installation tolerance, including track construction and maintenance tolerances. At critical locations, restricted clearance over bridges, or fixed track points, grade crossing, embedded or direct fixation trackwork, no allowance will be made in the OSC design for track lift. At non-critical ballasted section locations, the OCS design will allow for a future track lift of up to 3 inches.

Deleted: *DRAFT*

Deleted: *Downtown*

10.4.2.2 Contact Wire Gradient

The pantograph shall track smoothly under the contact wire at all times. Where the contact wire height needs to be changed, the change shall not cause bouncing and arcing of the pantograph. Table 10.2 provides recommendations for the maximum wire gradient versus the streetcar speed ranges. To allow for an installation tolerance, the design wire gradient shall not exceed 90% of those listed here:

Table 10.2 – Maximum Wire Gradient versus Vehicle Speed

Vehicle Speed Range (mph)	Maximum Gradient (%)
1 - 15	2.3
15 - 30	1.3
30 - 35	0.8

Note: The maximum change of contact wire gradient shall be equal to one-half the maximum gradient, from one span to the next.

10.4.2.3 Loading

Structural loading will be based on NESC Rule Sections 25 and 26, combined wind and ice loading, "medium" or “light” loading district, based on engineering judgment.

10.4.2.4 Span Lengths and Staggers

The span lengths will be designed to provide for security (prevention of de-wiring) and to maintain good current collection.

The contact wire will be displaced from track centerline on both tangent and curved track. Stagger is the deliberate lateral displacement of the contact wire at each support to the left or right of the elevated track centerline. On tangent track, the wire is staggered primarily to achieve uniform wear of the pantograph collector strip. On curved track, the offset displacement achieves the tangent/cord construction necessary for the "straight-wire" OCS to negotiate the curve.

The designer will consider the effects of environment, track geometry, vehicle and pantograph sway, and installation and maintenance tolerances. Vehicle roll into the wind will be taken equal to 50% of the maximum dynamic roll value, in accordance with AREMA Manual Chapter 33, Part 4. Structure spacing for the OCS shall be as great as possible consistent with maximum midspan offset criteria and maximum working load at registration points.

10.4.2.5 Clearances

Clearances will be maintained between live conductors, including pantographs, and any grounded fixed structures in accordance with the AREA Manual, Chapter 33, Part 2 as follows:

	Static	Passing
Normal Minimum	6"	4"
Absolute Minimum	5"	3”

Deleted: *DRAFT*

Deleted: *Downtown*

Static clearance is the clearance between the OCS and any grounded structure when not subject to pantograph pressure. Passing clearance is the clearance between the OCS or pantograph and an overhead structure under actual operating conditions with the vehicle moving.

For vehicle related clearances, full allowance will be included for dynamic displacement of the vehicle under operating conditions, including tolerances for installation and maintenance in the track and OCS. Refer to Chapter 2, Track Alignment and Trackwork, and Chapter 8, Vehicle, for additional information.

10.4.2.6 Factor of Safety

The OCS will be designed in accordance with the factors outlined in the NESC Section 26 under the loading conditions specified.

10.4.2.7 Basic Design

The design of the OCS shall be based on engineering studies. Basic design, as expressed below, is to provide a set of detailed parameters for application in site specific design of the OCS for the project.

OCS Parameter Study

The OCS parameter study shall include calculations that take into account all factors that contribute to horizontal and vertical displacement of the contact wire with respect to the pantograph. This study is required for different contact wire heights and shall be supplied in the form of the Overhead Contact System (OCS) Technical Sheets.

The OCS Technical shall include the at minimum the following shall include the following:

- Maximum span length
- Conductor blow-off
- Permissible midspan static offset for the contact wire
- Pantograph security analyses for selected contact wire heights

The results of each study shall be given in basic design charts and graphs included in the project drawings.

Required Considerations for Each Study

- Climatic condition: wind and temperature
- Conductor dimensions and tensions
- Conductor stagger
- Stagger effect
- Pole deflection due to live loads such as wind and conductor tension change
- OCS erection tolerances
- Vehicle roll and lateral displacement, or 50% maximum roll into ‘operating’ wind
- Pantograph Collector overall width
- Pantograph sway

Deleted: *DRAFT*

Deleted: *Downtown*

- Track maintenance tolerances
- 'Wind' and 'no-wind' operating conditions

Conductor Tensions

Conductor tensions shall be selected to provide a practical and economical configuration of the OCS suitable for the environmental conditions, the electrical requirements, normal and emergency operations and ease of maintenance. Maximum conductor tensions shall comply with NESC Rules 261H and referenced Rules 250 and 251. The OCS is to be considered as NESC Grade C construction for these purposes.

Contact Wire Vertical Loads

Vertical loads shall be calculated for selected operating and non-operating conditions for span lengths equal to or greater than 30 feet in 5 foot increments.

Contact Wire Radial Loads

On tangent track, contact wire radial loads due to maximum tension for 5-foot increments of span lengths shall be calculated with maximum staggers. On curved track, contact wire radial loads shall be calculated for every degree of angle deviation, in one degree increments, between 1 and 15 degrees. Radial angles greater than 15 degrees are not acceptable.

Contact Wire Staggers

Maximum stagger calculations shall be prepared using 50% of all allowances made for pantograph security calculations. Maximum stagger shall be determined by subtracting the 50% allowance total from the half width of the pantograph carbons. Maximum stagger values shall be calculated for curved track and tangent track for both normal contact wire height, and for maximum contact wire height.

Pantograph Clearance Envelope

A pantograph clearance envelope shall be developed for application on all tracks, for the worst track conditions and full vehicle roll plus a 3-inch mechanical clearance. No equipment, except OCS steady arms attached to the contact wire, shall intrude into the pantograph clearance envelope.

Sectionalizing Requirements

OCS sectioning at power feed locations shall be done using insulated overlaps. All other operational sectioning shall be done using insulated overlaps or, where not possible, section insulator assemblies.

OCS Route Design

A route design is to be prepared to determine at a low level of detail, the arrangements of each tension length of OCS to be built or altered. Each tension length shall be planned to be as long as practical in accordance with the results of sectioning requirements and the lengths of contact wire on a drum. Splicing of new construction contact wire should be avoided.

The route design shall take into consideration fixed locations for insulated overlaps, station crossovers, low clearance buildings and bridges, and any infrastructure features preventing the placement of wiring terminations.

Live conductors shall not be installed above passenger platforms or buildings. A clearance study, showing plan and profile of OCS shall be made for each overhead bridge and structure.

Deleted: *DRAFT*

Deleted: *Downtown*

The study shall bring out the minimum clearance between OCS and the structure under worst conditions.

The result of the OCS route design shall be documented on a Master Overlap Chart.

10.4.3 Product Requirements

10.4.3.1 OCS Conductors

The contact wire will be solid grooved hard-drawn copper 350 KCMIL, conforming to ASTM Specification B47. The conductor size should be confirmed by the power simulation study. The effect of temperature change on all conductors will be taken into consideration when designing for conductor tension. In addition cross section area loss will be taken in to account when performing calculations. Tension calculations should take into account a 30% loss and current carrying calculation should take a 15% loss into account.

10.4.3.2 Poles and Foundations

Round or round tapered poles as specified with KCMO's Department of Transportation will be used everywhere along the alignment. In some areas existing OCS poles may be reused subject to verification of the ability of the poles to carry the applied loads. Unless dictated by special conditions, poles will be mounted by means of embedded anchor bolts. In areas where conditions require other than cast-in-place concrete foundations, each location must be evaluated and a foundation designed that meets the site specific requirements as well as the Design Criteria and approved by KCMO. Each foundation will have a ground connection installed and all poles will be grounded directly to the foundation ground connection. Ground resistance shall not exceed 25 Ohms. The pole base plate, foundation reinforcing bars, anchor bolts and ground rod will be electrically connected. Poles will be sized in accordance with NESC Sections 25 and 26 for "medium" districts.

Anchor bolt patterns will be selected to provide a one-on-one relation between pole and foundation, based on matching strength.

Pole live load deflection plus foundation rotation during train operation will be +/- 1 inch at contact wire height. Pole deflection at the top of the pole under NESC medium loading conditions will be no more than 2.5 percent of pole length. Overload factors will not be applied in the calculation of pole deflection Cross track pole width, live load deflection and foundation rotation will not be greater than 18.5 inches.

The design and construction of the pole foundations and guy anchor foundations will conform to established civil and structural engineering practices, ASTM and ACI standards, and other applicable codes. The foundations will be reinforced concrete or steel tubular piles and will be capable of withstanding the design load imposed during installation, operation and maintenance.

10.4.3.3 OCS Support Systems

Depending on location and type of system, various types of supports are required for the OCS. In all cases, the supports will be double insulated. All supports for the OCS will be designed to comply with Article 225, Electric Railway Construction of the NESC.

Deleted: *DRAFT*

Deleted: *Downtown*

10.4.3.4 Cantilevers

Cantilevers shall be used for parts of the alignment requiring single OCS poles or where the use of cross spans is not viable. The bracket used to attach the arm to the pole will be fitted with hinge pins.

10.4.3.5 Head Spans

Head span supports, consisting of a lower steady span wire and an upper headspan wire, will be used where more than two contact wires need to be supported or where the track separation is more than 30 feet.

10.4.3.6 Cross-spans

In areas where wide support systems are required, cross-spans will be employed.

10.4.3.7 Bridge Attachments

Bridges along the streetcar alignment will be checked to verify if they can support poles and pole loading. Typically OCS over bridges will be cross span or center cantilever arm type OCS as approved by KCMO. Bridge attachments shall be checked by structural engineers to verify the existing structure can handle the OCS loads using the design code the bridge was originally designed for and/or the latest LRFD code.

Deleted: able to

10.4.3.8 OCS Surge Arresters

Surge arrester units shall have a dedicated ground rod outside of the foundation. Ground rod resistance shall be 5 Ohms or less and in accordance with manufactures recommendations. See Section 10.3.3 for surge arrestor allocation.

10.4.3.9 OCS Grounding and Bonding

All OCS support structures will be grounded.

10.5 NEGATIVE RETURN PATH AND STRAY CURRENT CONTROL

Running rails will be of the continuous welded type. Where it is necessary to have a bolted connection, the bolted joints will be electrically bonded. At locations requiring insulated joints, impedance bonds will be used to maintain continuity of the dc negative return circuits when warranted. Insulated joints will be installed at the entrance to the shop buildings to prevent any connection between the traction power system in the shop and on the main line.

The final design team will employ designs that will mitigate stray currents and to provide means of monitoring any potential stray current conditions as directed by KCMO. As a minimum, the following measures will be employed to mitigate stray current conditions. Running rails will be isolated to the extent practical from ground. The mainline traction power system will be isolated from the shop traction power systems. All traction power distribution system design will be coordinated with the Corrosion Control Chapter.

Deleted: *DRAFT*

Deleted: *Downtown*

THIS PAGE INTENTIONALLY LEFT BLANK

Deleted: *DRAFT*

Deleted: *Downtown*

11.0 SIGNAL AND ROUTE CONTROL

11.1 General

The streetcar will be equipped with a train-to-wayside communications (TWC) system that will perform the following functions:

11.1.1 Activate Special Traffic Signals

At locations specified by the design plans and/or by KCMO, special streetcar signals may be provided at certain intersections to allow the streetcar to proceed through the intersection independent of auto traffic.

Deleted: will

11.1.2 Routing

The train-to-wayside controller will have provision for the manual setting of pre-determined routes. The train-to-wayside will then proceed to activate and set wayside powered track switch machines appropriate for the route. Manual switch control will also be possible.

The routing will also activate the passenger next stop on-board announcement system, via the GPS-based Automatic Vehicle Location (AVL) system used by KCATA.

Crossing Protection

The train-to-wayside controller will include systems to facilitate safe operation of all crossing equipment at trackway crossings.

11.2 Applicable Codes and Standards

While the streetcar system is not a part of the national railroad system, and is therefore generally not subject to the oversight of the U.S. Department of Transportation, Federal Railroad Administration (FRA); the rules and regulations of the FRA, the recommended practices of the AREMA, and the *Manual on Uniform Traffic Control Devices* (MUTCD) will serve as additional non-mandatory guidelines where applicable. Where the streetcar crosses a railroad at grade or otherwise affects railroad operations, the regulations of the FRA will apply.

11.3 Functional Design Requirements

The TWC system will use transit-proven state-of-the-art, off-the-shelf standard equipment and components, to the greatest extent possible, to provide the highest levels of reliability, maintainability and safety performance for both streetcar and street traffic. The system will be compatible with the AVL system used by KCATA, the traction power distribution system, the streetcar vehicles, and other relevant communications systems that may be used by KCMO.

Deleted: any

All equipment (vehicle and wayside) will be proven to operate in climate conditions similar to or more severe than those found locally.

Deleted: *DRAFT*

Deleted: *Downtown*

11.4 Operational Design Requirements

The streetcar TWC system will interface with existing and new street traffic signal controllers, and activate all power track switch machines.

The TWC will have provision for the manual entry of codes for pre-determined routes. The train-to-wayside system will then proceed to automatically activate and set wayside powered track switch machines as appropriate for the route. Individual manual switch control or override capability will also be provided.

On the wayside, detector loops will be provided between the rails at those locations where vehicle control of wayside devices is required. These loops will provide input to wayside controllers that will interpret vehicle commands and perform designated wayside functions, such as throw switches, interface to traffic signal controllers, and activate separate warning signs and signals.

Equipment proven in streetcar applications similar to local conditions will be used.

11.5 Electromagnetic Interference

The TWC system will be designed to operate in the electromagnetic environment of the streetcar system, while causing the minimum possible interference to other systems. The equipment will be designed, selected and installed with consideration given to the electromagnetic environment, which includes the traction power supply, DC power distribution systems, vehicle propulsion systems, communication systems, adjacent railroads, industrial facilities, and electric utility lines.

All portions of the TWC system and its components will be designed to operate in the electromagnetic environment that will exist in the vicinity at the time of construction. No portion of the signal system will suffer from, or contribute to, harmful electromagnetic interference, conducted, radiated, or induced.

11.6 Growth and Expansion

The TWC will be expandable for use on future routes or extensions with only minor modifications.

11.7 Switch Machines

All track switches that are designed to be power-operated will be indicated as such on the plans and Operating Plan. All power switches will include a manual override. All powered switches outside of the yard will be activated by the TWC system and equipped with point locking and point detection. Turn-around wyes, sidings and other similar seldom-used turnouts will be equipped with manually operated switch machines and will not be equipped with point locking or point detection. When possible, all system turnouts shall be trailable damage to the streetcar or the turnout.

Deleted: power

Streetcar signals to indicate the route setting of the power switch will be provided at locations deemed necessary by KCMO and will be mounted on the nearest overhead contact system (OCS) pole. These signals will be interlocked with the switch locking and point detection circuitry such that they will illuminate only when the switch is properly positioned and locked.

Deleted: *DRAFT*

Deleted: *Downtown*

These signals may be illuminated by the traffic signal controller when appropriate for streetcar movement, depending on location.

11.8 Traffic Signal Interface and Streetcar Signals

Where the streetcar operates in mixed traffic and moves in the same general traffic flow (not transitioning into semi-exclusive lanes or diverging against normal traffic), streetcar movements will be under the control of the traffic signal system. In cases where the streetcar will transition into special lanes or into semi-exclusive operation, a special signal will be given for the special movement of the streetcar. These special signals may also include traffic signal priority

Where switches need to be controlled for routing cars onto and off a particular streetcar route, a TWC system for this purpose will be provided and interconnected with the traffic signals.

Where required, special signal indicators for use by the streetcar will be provided. Special signal phases will be needed in the traffic signal controllers.

Where streetcars require a separate signal cycle to move through intersections, whether in mixed traffic or reserved lanes, special signals will be provided to control streetcar movements. These streetcar signals will be physically separated from the traffic signals.

At intersections where the streetcar is passing through a track switch, the “Proceed” signal will be interlocked with the track switch such that a “proceed” aspect will not illuminate unless the switch is properly set and locked. When illuminated, the signal aspect will indicate the direction for which the track switch is set.

Where required, the method of detecting the approach or presence of streetcars will be done by detecting the vehicle’s TWC signal by means of loop antennas mounted between the running rails.

Deleted: *DRAFT*

Deleted: *Downtown*

THIS PAGE INTENTIONALLY LEFT BLANK

Deleted: *DRAFT*

Deleted: *Downtown*

12.0 COMMUNICATIONS

12.1 General

The communications systems will be used by several groups within the streetcar system. These groups include Operations, Maintenance, Fare Inspection, Patrons, and Emergency Response Authorities. The communications and control systems are required to support two-way audio communications between streetcar personnel and data exchanges between electronic systems, during both normal and emergency situations.

The communications systems will allow operators to communicate with the Operations Control Center (OCC) located at the streetcar Vehicle Maintenance Facility (VMF) with a backup center to be determined later in design. Personnel in the OCC will be able to communicate with Emergency Response Organizations and with on-duty maintenance personnel. The communications systems will also be used by maintenance personnel both in yards, along the wayside, and in other locations where the normal performance of duty may take them.

Deleted: Maintenance and Storage

Deleted: MSF

The system will provide for data exchanges between subsystems installed in vehicles, passenger stops, traction power substations, along the right-of-way, and at the OCC. The system will also facilitate data collection on vehicle status, traction power systems status, the signal/traffic control system, and electrical and mechanical equipment at stops. The data exchanges will include information on emergency conditions and intrusion alarms.

The communications systems will also provide an information system for the patrons and have the flexibility to present special messages and announcements.

These systems will be dependable with redundancies built into areas where a single failure would violate the security requirements of the system. The systems design will provide a medium consisting of fixed cables, radio (both portable and fixed), electrical equipment, and computers in an integrated flexible configuration that allows for ease of modification and future expansion. The communications and control systems will include:

- Existing KCATA Communication and Data Exchange Systems
- Security Systems (CCTV, Intrusion, Access Control)
- Passenger Information System (Variable Messaging Signage, PA)
- Radio / Telephone Systems
- Supervisory Control and Data Acquisition (SCADA) System (Proposed)
- Communications Transmission System

12.2 Communications Systems

12.2.1 Existing KCATA Communications and Data Exchange Systems

The streetcar project shall conform and be compatible with the existing communication system used by the Operator (KCATA). These systems include, but not limited to, the Automatic

Deleted: *DRAFT*

Deleted: *Downtown*

Vehicle Location (AVL) system, the proposed farebox data exchange system, and future data communication upgrades.

12.2.2 Telephone Systems

Telephone systems are not recommended for installation at streetcar stops.

12.2.3 Administrative Telephones

An Administrative Telephone system will be installed in shops, yards, office areas, traction power substations (TPSS), and signal relay houses as identified by KCMO and the Operator. The Administrative Telephones will be connected to the local telephone company's switches.

In shops and yard areas, provisions will be made for the installation of telephone jacks in all areas where offices will be located. Telephone cabling will be routed from the installed jacks to the electrical/telecommunication's room/closet. Telephone equipment will be provided by the local telephone company.

12.2.4 Streetcar Stop Passenger Information System

Streetcar stops may include a variable message sign (VMS) which indicate to passengers when the next streetcar will arrive, information to connecting bus service, if streetcars are delayed, and direct passengers to plug bus service or bus bridge service. Location of the variable message signs will be directed by KCMO.

12.2.5 Security Systems (CCTV, Intrusion, Access)

12.2.5.1 CCTV (FUTURE)

CCTV service from select stations, VMF, and other streetcar project sites will not be provided in this phase of the project.

Deleted: MSF

12.2.5.2 Intrusion Detection and Alarm Systems

The intrusion detection and alarm systems will detect and provide warning of entry into the operations center at the VMF, TPSS, communication rooms, maintenance and repair facilities, and other secure locations.

Deleted: MSF

The intrusion detection and alarm systems will be electrically supervised, selectively coded, and continuously self-monitoring. System components will conform to applicable codes and standards.

The intrusion alarm system will allow multiple zones and levels of security access.

The communications transmission subsystem will be used to transmit alarms to the control center. A summary indication of detectors deactivated as well as Alarms and system malfunctions will be provided. Provision will be made to test the system from the Control Center.

12.2.6 Passenger Information Systems

12.2.6.1 Public Address

At the maintenance facility, a public address (PA) system will be integrated into the Administrative Telephone System.

Deleted: *DRAFT*

Deleted: *Downtown*

A PA system will be provided on each streetcar to make announcements to the passengers within the vehicle. Live announcements will be initiated locally by the vehicle Operator via the vehicle PA system.

Pre-recorded messages stored in the vehicle may be selected for announcement via the onboard PA system by vehicle operator selection. The vehicle PA system will be supervised with automatic prerecorded self-check capability.

12.2.6.2 Variable Message Signs

Variable message signs (VMS) will be installed at stops as determined by KCMO and will be ultimately controlled from the OCC. These signs will be used to display passenger information including next arriving streetcar information, streetcar delay information, and information about plug bus service or bus bridge service.

12.2.6.3 Multimedia Monitors (Future)

In a later project phase, multimedia monitors can be installed at each stop as determined by KCMO and will have the capability of being controlled locally and remotely from the Control Center. These signs will have the capability to be used to display passenger information, news, advertising, etc.

12.2.7 Supervisory Control and Data Acquisition System (Proposed)

A Supervisory Control and Data Acquisition (SCADA) system may be required to monitor and control defined streetcar systems. KCMO will determine if the system will be required and ultimately how it is configured. If such a system is added, it is proposed that the SCADA system will be comprised of main computers installed at the OCC and linked to subsystems and other equipment on the wayside and in the TPSS via a communications transmission system. The SCADA System will process all data collected by its data acquisition programs for use in display, control, and other application programs.

The SCADA system will collect data from the TPSS, the signaling/traffic control system, the intrusion detection system, passenger information systems, vehicles and communication systems, via Remote Terminal Units (RTU). Each RTU will be connected to the OCC via the Communications Transmission System (discussed in Section 12.2.8) and will support remote supervisory control and data acquisition and control functions.

Dispatchers at the OCC will have access to the SCADA system via terminals. Secure authorized access, with multiple layers of access, will allow operators to select and operate any device under the control of the SCADA system. The Dispatchers will be able to initiate supervisory control action from graphic displays, one-line displays, and tabular displays on workstations. Control commands will require a multi-step operation to prevent inadvertent equipment operation.

The SCADA system will recognize the differences in response times of various devices, provide the user with an indication that a control action is in progress, and report the results of the control action. At the completion of the system programmer-adjustable time period, the SCADA system will report that the control action was completed successfully, or the control command sequence was not completed successfully.

The SCADA system will verify the response to all control actions by monitoring the appropriate status inputs for the commanded change. A report-back time delay, the value of which depends upon the type of device, will be initiated when the command is issued. If the appropriate

Deleted: *DRAFT*

Deleted: *Downtown*

response is not detected before the report-back time delay expires, an alarm message will be generated indicating failure of the control action. The report-back delays for each type of controllable device will be programmer-adjustable from 1 to 180 seconds.

The SCADA system will monitor the energized/de-energized state of all overhead contact system (OCS) sections outside of the Yard and Shop. The state of each OCS section will be indicated using the open/closed status of DC feeder breakers and disconnect switches and DC bus energization status at the associated TPSS. The SCADA system will update the display whenever any element changes state.

The AC and traction electrification systems will be monitored and controlled via discrete input/outputs (I/O) to the RTUs in the substations.

12.2.7.1 Emergency Trip Stations

Emergency Trip Stations (ETS) are located at each TPSS and in the yard area and will be used during an emergency to de-energize OCS sections by tripping the associated DC feeder breakers. Following an ETS operation, the proposed SCADA system will reset the ETS cards but not restore the tripped breakers. Emergency Trip Stations will be located at places directed by KCMO and City Fire Department. Each ETS will be of a “knox” box type and access will be determined by KCMO.

12.2.7.2 SCADA System Communications (Proposed)

Integrated Control System equipment at stops, in the yard, and at TPSS will be connected to the equipment in the OCC. A Communications Transmission System will be installed and provide the link between these components. Potential solutions for this requirement will be examined and the most cost effective solution selected and implemented.

12.2.7.3 Communications Interface to the Remote Workstation (Proposed)

The cable transmission system will enable network communications between the SCADA system master station to the remote workstation located at the Yard.

12.2.8 Radio Systems

A radio system consisting of fixed, mobile, and portable radios will be required for the streetcar system. This radio system will be used by operations, maintenance, security, and management personnel.

Radio transmission will provide the primary communications service for areas where it is impracticable to provide hard wired communications. Two-way voice communications via radio will serve streetcars and maintenance vehicles and portables with channels provided for operations, maintenance yard operations, security, and emergency functions.

The radio subsystem will encompass the OCC, wayside, passenger stops, passenger vehicles, yard area, and portable equipment. The radio subsystem will provide two-way communications over channels for streetcar operations, maintenance operations, municipal police, ambulance and fire departments as directed by KCMO. The signal quality will be as minimum, CM-4 with a 95 percent coverage probability at 95 percent of required locations.

If a future SCADA system is proposed, an interface will be provided between the streetcar radio system control computers and the proposed SCADA System computer to enable the exchange of data. The Radio System control computer will collect and report any failure of radio equipment, either in the base stations or in the vehicles and make this data available to the

Deleted: *DRAFT*

Deleted: *Downtown*

SCADA System computer, permitting the SCADA System computer to identify the available and unavailable equipment in the system. Other information that will be transferred will include the identification of the radios installed on each vehicle within the system, along with any silent alarms whenever initiated from any of the radios.

12.2.9 Communications Transmission System

The Communications Transmission system will use hardwire or radio links to the Internet to transfer data, audio, and video, based on the conditions at the various locations.

In areas where available, a direct hardwire internet connection will be used to transfer data, audio, and video, to or from Stops.

In areas where a direct hardwire internet connection is not available, a radio-based Internet connection will be used.

12.2.10 Operations Control Center (OCC)

The Operations Control Center for the streetcar system is located at the VMF. It will house the future SCADA server, the radio and communications rack equipment, and streetcar system control workstations. The workstations will operate in hot standby configuration with one being operated while the other serves as backup. Each workstation will consist of an administrative telephone, a future SCADA workstation, a passenger information workstation and an emergency service/video workstation.

Deleted: MSF

Deleted: *DRAFT*

Deleted: *Downtown*

THIS PAGE INTENTIONALLY LEFT BLANK

13.0 URBAN DESIGN

This chapter provides a functional overview for the standards and design guidelines of the urban aesthetics for the Kansas City Streetcar Project corridor. Basic functions will be the context of the streetcar facilities and the surrounding streetscape. The facilities should be functional allowing for shade and comfort, while the streetscape should allow for an aesthetically pleasing atmosphere with the use of trees and other plantings and also allowing for a safe and comfortable pedestrian environment.

13.1 Neighborhood Context

The urban design should enhance the current appearance while also keeping elements of the existing neighborhood and its character. The design goal should be to have a transit friendly environment allowing for safe pedestrian environment.

13.2 Landscaping Guidelines

- Visual mitigation recommendations should be incorporated from the corridor assessment and each visual assessment unit as described in the environmental documentation.
- Trees and other plantings should be designed and appropriately placed to provide shade and add comfort to waiting passengers.
- Trees and other plantings should be appropriately placed so as to allow for the streetcar to blend in with the surroundings and the streetscape.
- All landscaping must meet local codes and standards.
- Proper communication should be maintained with all stakeholders impacted by the project; they should be properly coordinated with about all design intentions.
- KCMO representatives should be coordinated with early in the design phase.
- All landscaping should be hardy and drought-resistant to minimize maintenance upkeep and water usage.
- All disturbed existing plant material should be replaced in kind where feasible and be consistent with the overall design criteria and standards.
- Maintenance responsibilities of the trees and other plantings should be determined early in the design phase.
- There should be coordination amongst the entire project to ensure that landscaping is consistent throughout the entire corridor.

13.3 Hardscape

- The width of the sidewalk and its location should be addressed early in the design phase to be sure that the proper amount of ROW is acquired.

Deleted: *DRAFT*
Deleted: *Downtown*
Deleted: ,
Deleted: allows
Deleted: proposed
Deleted: Incorporate v
Deleted: Environmental Assessment (EA)
Deleted: the
Deleted: Make sure there is p
Deleted: to
Deleted: and that
Deleted: are
Deleted: drought
Deleted: it is
Deleted: meet

- The hardscape should be coordinated with KCMO to ensure that the hardscape either matches the existing hardscape being tied into or is replaced per the City's request. The condition of the existing hardscape as well as the historical nature will factor in to the decision.

- The preferred sidewalk width (8 feet), as well as driveway widths, should be verified with the local jurisdiction to meet appropriate codes and standards.

- Private developers adjacent to the proposed corridor should be coordinated with to ensure that the project hardscape design is consistent with existing and planned hardscapes.

- Any artistic hardscape should be coordinated to determine if it should be replaced.

- All hardscaping should be in conformance with the Americans with Disabilities Act Accessibility Guidelines (ADAAG).

Deleted: *DRAFT*
Deleted: *Downtown*
Deleted: cities
Deleted: of
Deleted: '
Deleted: s
Deleted: that they
Deleted: proposed

Deleted: *DRAFT*

Deleted: *Downtown*

THIS PAGE INTENTIONALLY LEFT BLANK

Deleted: *DRAFT*

Deleted: *Downtown*

14.0 TRAFFIC

This chapter establishes the basis for engineering criteria to be used in the design of traffic-related elements of a KCMO's streetcar system. It includes requirements for traffic control devices and criteria for the design of the traffic signal systems, signing, and pavement markings as they apply to interfacing the streetcar lines with the street and highway network.

Deleted: modern

14.1 Applicable Codes

Traffic vehicle and pedestrian signals, signs, and markings shall be in accordance with the Transportation Access Management Guidelines for KCMO and with the *Manual on Uniform Traffic Control Devices* (MUTCD) published by the US Department of Transportation (USDOT).

Materials and equipment used in each installation and/or modification of traffic signal systems, signing, and paving markings shall conform to the latest specifications contained in the standards of KCMO.

14.2 General Design Criteria

Where streetcars operate on a public street, but in semi-exclusive lanes, a guideway at least as wide as the dynamic envelopeof the cars shall be delineated or physically separated from parallel general traffic on that street. For mixed-traffic operation, the shared lane shall at least be as wide as the dynamic outline of the streetcar vehicle. The majority of the project will be of mixed traffic operation.

Deleted: outline

Deleted:

Deleted: mixed

Where the guideway is non-exclusive (not physically separated from traffic lanes by curbing, fence, or other physical devices, but not sharing traffic) it shall be delineated by a paving material and texture suitable to the situation. Delineation shall be provided by markings on the paving and/or by contrasting paving material. The width of the guideway shall include a buffer zone outside the dynamic envelope of the streetcar suitable to the specific location.

Physical separation may be accomplished by barriers and/or curbs to channelize vehicular traffic. The design of these barriers and curbs shall conform to highway design standards applicable at the location of their installation.

Traffic turning movements across the track(s) from a parallel traffic lane shall be limited wherever possible. At locations where such turns across the tracks must be allowed, special traffic signal phasing, including any appropriate signing, marking, movable gates, and roadway geometry, shall be provided to control conflicting movements.

Guideways and passenger stops shall be designed so as not to create any unnecessary interference with pedestrian or bicycle movements. Where pedestrians and/or bikes must cross streetcar tracks, appropriate pavement markings and control devices shall be provided. Where a pedestrian and/or bike crossing is part of a signalized street intersection, control shall be provided by means of standard vehicle, pedestrian, and/or bike traffic signals.At other locations, at the direction of KCMO, these devices may be supplanted or supplemented by passive signs, active signs, flashing beacons, movable gates, or any combination thereof.

Deleted:

Where traffic signal modifications or new installations are being completed, signal push buttons shall be relocated/installed to meet current ADA requirements.

Where the streetcar operates in mixed flow in the existing traffic lane, streetcar movements will be controlled by normal traffic signal operations. At locations where sight distance is limited or the streetcar must make a left-turn movement, transition into or out of special lanes, or transition into semi-exclusive operations, special transit-only signals will be provided. These transit signals will be physically separated from the traffic signals and will use transit-only display indications consistent with the MUTCD. See Chapter 11, Streetcar Signaling and Route Control, for further information regarding streetcar signals.

14.3 Control of Streetcar Interface with Traffic

At locations where streetcars will operate on semi-exclusive guideway, traffic control shall be provided by intersection-type traffic signals. Interconnection with nearby traffic signals on the public street may be required in some cases.

Where streetcars require a left- or right-hand turn at intersections, whether in mixed traffic or semi-exclusive lanes, special signals can be provided to control streetcar movements. These streetcar signals shall be physically separated from the traffic signals. They shall be designed so as to display indications that are distinctive in themselves and do not resemble those displayed by conventional traffic signals. For more detail regarding streetcar signals, refer to Chapter 11, Streetcar Signaling and Route Control.

These intersection streetcar signals may be operated by the same controller that operates the traffic signals or by a separate, but interconnected and compatible, controller. This control equipment shall be capable of adding a separate phase for streetcar movement on a pre-timed basis at any point in the cycle and shall also be capable of deleting such phases when not required. The equipment shall also be capable of coordinating signal operation at each intersection with any network of which it is a part.

Intersections will also require Accessible Pedestrian Signals (APS) that will allow for communication with pedestrians in a non-visual manner, such as audible tones, speech messages and vibrating surfaces.

** PROVIDE ADDITIONAL GUIDANCE ON TSP UPON COMPLETION OF PE PHASE TSP STUDY **

14.4 Sign Design

Traffic signs related to streetcar operations shall be installed in accordance with the MUTCD and KCMO Traffic Engineering and Operations Manual.

14.5 Pavement Marking Design

Pavement markings related to streetcar operation shall be installed in accordance with the MUTCD and KCMO Traffic Engineering and Operations Manual. Special markings where required to delineate the dynamic outline of the streetcars will conform to MUTCD.

Deleted: *DRAFT*

Deleted: *Downtown*

Deleted: will

Deleted: Signals downtown default to walk cycles for pedestrians; therefore, no signal push buttons are required in this area.

Deleted: non

Deleted: Traffic Signal Design Manual and the Transportation Access Management Guidelines

Deleted: Paving

Deleted: Transportation Access Management Guidelines

Deleted: *DRAFT*

Deleted: *Downtown*

14.6 General Operations

Each streetcar shall be equipped with a gong and a horn or whistle to warn motorists and pedestrians who are in potential conflict. The gong shall be used in residential and business districts where speeds are low. Use of the horn or whistle shall be reserved for locations where the streetcars operate at or above 35 miles per hour (mph), but should be used for emergencies at any location.

At signalized intersections, streetcars shall approach at speeds that will permit them to stop short of the point of conflict if the roadway is already occupied, and in no case at a speed higher than the posted speed limit.

Deleted: *DRAFT*

Deleted: *Downtown*

THIS PAGE INTENTIONALLY LEFT BLANK

Deleted: *DRAFT*

Deleted: *Downtown*

15.0 STRAY CURRENT AND CORROSION CONTROL

This chapter will apply to corrosion control design for underground metallic structures and pipes, storage facilities, and any other facilities where corrosive conditions can occur, Types of corrosion control include stray current mitigation, protective coating, and cathodic protection.

15.1 Purpose

These criteria describe design requirements necessary to accomplish corrosion control measures for rail transit projects utilizing electric traction. Design factors to consider for each system include plans to minimize stray current at the source, prevent premature failures of transit facilities, and other underground structures to be installed, operated, and maintained in a cost effective manner. Corrosion control requirements will be coordinated with all applicable engineering disciplines.

15.2 Standards and Codes

Standards, codes, and recommended practices for corrosion control include, but are not limited to, the following publications and/or codes:

- NACE International
- National Fire Protection Association
- American National Standard Institute
- American Standards for Testing Materials
- American Water Works Association
- American Electric Railway Association
- Department of Transportation
- Steel Structures Painting Council
- Institute of Electrical and Electronic Engineers
- Underwriters Laboratories, Inc
- The Occupational Safety and Health Act
- National Electrical Code
- Military Specifications
- National Electrical Manufacturer's Association
- National Electrical Safety Code

Local and state codes also apply. Designers will consult these publications and provide systems in accordance with the most stringent applicable code, or industry practice.

Deleted: *DRAFT*

Deleted: *Downtown*

15.3 Scope

15.3.1 General

These criteria are separated into three areas, namely: stray current corrosion control, soil corrosion control, and atmospheric corrosion control. The design criteria for each of these categories and its implementation will meet the following objectives:

- Realize the design life of transit facilities by avoiding premature failure caused by corrosion.
- Minimize annual operating and maintenance costs associated with material deterioration.
- Ensure continuity of operations by reducing or eliminating corrosion-related failures of transit facilities and subsystems.
- Minimize detrimental effects to facilities belonging to others as may be caused by stray earth currents from transit operations.

15.3.2 Stray Current Corrosion Control

Stray current control will be based on the following principles:

- Increasing the conductivity of the return circuit
- Increasing the resistance between the return circuit and the earth
- Increasing the resistance between the earth and underground metallic structures
- Increasing the resistance of underground metallic structures
- Providing Sacrificial Anodes when warranted

Stray current control measures will be installed on traction power and track systems to obtain minimal flow of direct current (DC) stray current into the surrounding environment. Protection measures will be applied to assure that stray earth currents are maintained within acceptable ranges to avoid deterioration of buried metallic structures. Prior to construction and final design KCMO will conduct Baseline Stray Current Tests to determine the effects and/or magnitude of stray currents, if present, on existing utility installations, and to serve as documented reference for future investigations as prescribed by KCMO.

Turnouts will be isolated for stray current protection by encapsulating the turnout components in a combination of isolative coating and rail boot prior to installation. The turnout will then be set in place and embedded in concrete.

15.3.3 Soil Corrosion Control

Soil and ground water corrosive characteristics will be determined and documented during the Baseline Stray Current Surveys. Analysis of the data obtained, or from supplemental on-site measurements, will be the basis for corrosion control designs. Structures will be protected against the environmental conditions by use of coatings, insulation, cathodic protection, and electrical continuity as appropriate.

Deleted: *DRAFT*

Deleted: *Downtown*

15.3.4 Atmospheric Corrosion Control

The atmospheric corrosion conditions such as temperature, relative humidity, wind direction and velocity, solar radiation, and amount of rainfall will be determined during the Baseline Stray Current Survey. The areas with corrosive atmospheres (industrial, marine, rural, etc.) will be identified. Materials selection, designs, and associated coatings will be based on recommendations of the survey and will be used to prevent metallic structures and hardware from atmospheric corrosion.

15.3.5 Grounding

Due to the natural difference between safety grounding and corrosion control requirements, the guidelines provided in these Criteria will be followed. Grounding designs for traction power substations, passenger stops (when warranted) shops and yards, aerial structures, and other wayside locations, will be reviewed by KCMO to assure corrosion control designs are not compromised.

15.4 Interfaces

Corrosion control will be interfaced and coordinated with other engineering disciplines and designs, including the utility, mechanical, civil, structural, electrical, trackwork, traction electrification, environmental, geotechnical, architectural, signals, communications, and safety and security designs.

15.5 Applicability of Criteria

Since the streetcar system may be designed and constructed in segments, corrosion control criteria will be applicable throughout the design, installation, and start-up process of all segments.

City of Kansas City Missouri Water Services Department has corrosion design criteria as part of Water Corrosion Control Design Standards.

15.6 Expansion Capability

Corrosion control systems will be easily expandable to the entire system without major reconfiguration, reconstruction, redundancy, and duplication of equipment. Experimental designs, equipment, and prototypes of a research nature are discouraged and must be reviewed and approved by KCMO prior to their implementation and prior to incurring any costs.

15.7 Special Design Provisions

During the pre-design and design phases of the project, the corrosion control designer will identify unique and special design cases such as existing building foundations, paralleling power lines, and unusual soil conditions. In these cases, the corrosion control designer will evaluate and recommend special design measures to KCMO as appropriate. KCMO will review and approve cases as necessary.

Deleted: *DRAFT*

Deleted: *Downtown*

15.8 Stray Current Corrosion Prevention

15.8.1 Purpose

The purpose of this section is to provide criteria for designs to minimize the corrosion impact of stray currents from the transit system which would impact transit system structures and adjacent structures. By the application of the appropriate design criteria, the magnitude of stray currents can be reduced to such low levels that their corrosive effect on buried structures is negligible. The basic requirements for stray current control are as follows:

- Under normal conditions, operate the transit system without direct or indirect electrical connections between both the positive or negative traction power distribution circuits and ground.
- Traction power and the trackwork will be designed to minimize stray currents during normal revenue operations.

15.8.2 Scope

Structures and systems that may be affected by stray currents will be identified. Typically these include, but are not limited to:

- Trackwork components
- Traction electrification system components
- Metallic pipes and casings
- Reinforced concrete structures

Designs will be coordinated with the outside agencies through KCMO.

15.9 Stray Current Corrosion Prevention Systems

The design of stray current corrosion prevention systems will be based on results of Stray Current Simulation model studies. The studies will predict magnitude of anticipated stray currents considering the variation of key parameters, including:

15.9.1 Traction Power Substations (TPSS)

The traction power distribution system will be separated into two electrically isolated sections: the mainline/yard, and shop.

The traction power substation will include a separate DC traction ground electrode. The DC ground electrode will be electrically isolated from facilities in the substation.

Substations will be provided with access to the DC negative bus for stray current monitoring, utilizing corrosion control junction boxes. The location of these boxes will provide ready access for maintenance personnel and area utility personnel.

15.9.1.1 Positive Distribution System

- Resistance-to-Earth Criteria. The positive distribution system will be normally operated as an electrically continuous bus, with no breaks, except for sectionalizing and during emergency or fault conditions. Intentional electrical segregation of mainline, yard, and shop positive distribution systems is also required.

Deleted: *DRAFT*
Deleted: *Downtown*

- Electrical Ground Connections, Overhead Contact System (OCS) Support Poles. For locations other than at aerial structures, electrical ground facilities for adjacent OCS support poles will not be interconnected. This will eliminate the possible transference of stray earth currents from one portion of the transit system to another because of an electrically continuous ground system.

Where OCS poles are to be located on aerial structures, provision will be made to interconnect these electrically and connect them to a ground electrode when required.

15.9.1.2 Negative Distribution System

- General. The following industry-accepted standards will be included in designs to afford an electrically isolated rail system to control stray current at the source.
  - Continuously welded rail;
  - Rail bond jumpers at mechanical rail connections for special track work when required;
  - Insulating pads and clips on concrete ties for ballast track work;
  - Insulated rail fastening system for wood ties at a special track-work installation for ballast track work;
  - Ballast on at-grade sections maintained a minimum of 25 mm (1 in) below the bottom of the rail for ballast track work outside the Vehicle Maintenance Facility (VMF);
  - Insulating direct fixation fasteners on concrete aerial structures not embedded when possible;
  - Insulating rail boots for embedded trackwork and at all roadway and pedestrian crossings and at the VMF storage yard;

    Cross-bonding cables installed between the rails to maintain equal potentials on all rails when warranted.

Deleted: Maintenance and Storage
Deleted: MSF
Deleted: MSF

- Resistance-to-Earth Criteria. The mainline running rails, including special trackwork and all ancillary system connections will be designed to have the following minimum in-service resistance per 1,000 feet of track (2 rails):
  - At-grade ballasted track with cross-ties (wood or concrete): 300 Ohms
  - Ballast deck aerial structures: 250 Ohms
  - Direct fixation track: 250 Ohms
  - Embedded track: 100 Ohms

Deleted: 250

Resistance may be attained by use of insulating track fastening devices such as insulated tie plates, rail clips, and direct fixation fasteners.

Supplemental insulated negative drainage return cables will be considered where extensive utility installations exist, or where major high pressure transmission pipelines are present.

All devices such as switch machines, train control installations, or other systems will be electrically insulated from the rails by use of dielectric materials.

15.9.1.3 Grade Crossings, Embedded Track

Rails, rail fasteners, and related metallic components will be electrically isolated from ground by coatings and insulating components as much as possible.

Deleted: *DRAFT*

Deleted: *Downtown*

15.9.1.4 Yards

The shop/mainline traction power segregation point will be located such that shop/mainline track are electrically isolated from each other, and from ground connections.

Yard track will include the following provisions:

- Ballast will be clean, well drained, high-resistivity material.
- A 1-inch minimum clearance between the ballast and all rail surfaces and electrically connected metallic track components for sections not embedded.

For embedded sections in the yard (on wood or concrete ties) the rail will be placed in rail boot.

15.9.1.5 Maintenance Shops

Shop traction power will be provided by a separate dedicated DC power supply electrically segregated in both the positive and negative circuits from the yard traction power system.

Shop tracks will be electrically grounded to the shop grounding system.

Shop tracks will be electrically isolated from yard tracks by the use of rail insulated joints. Actual locations of insulating joints will be placed such that parked vehicles will not electrically short the shop and yard separate traction electrification systems for periods of time longer than that required to move a vehicle in or out of the shop.

15.9.1.6 Water Drainage

Water drainage system will be designed to prevent water accumulation from contacting the rails, rail insulating joints, rail metallic components and insulators, and rail ties.

15.9.2 Electrical Bonding

15.9.2.1 Aerial Structures

All longitudinal bars in the top layer of reinforcement will be tack welded at all overlaps to insure electrical continuity.

Collector bars of the same size as the transverse reinforcement will be tack welded to the longitudinal reinforcement at expansion/contraction joints, ends of construction segments and ends of contractual sections if warranted.

A minimum of two bonding cables will be installed on each side of an electrical break in the structure.

Structural deck members will be electrically insulated from support piers and abutments as much as possible.

A ground system, and related test stations, will be provided at each end of the structure and at intermediate points as required.

Another option to welded structure mat would be to use epoxy coated rebar in the structure.

15.9.2.2 Retaining Walls

Protection of retaining walls will be examined by a case by case basis by KCMO. Protection of retaining walls will be via all longitudinal bar overlaps in both faces of the wall, including the top and bottom bars of the footing, will be tack welded to insure electrical continuity. Longitudinal

Deleted: *DRAFT*

Deleted: *Downtown*

bars in the footing will be made electrically continuous to the longitudinal bars of the walls. Collector bars and bonding cables will be installed as stated in Section 11.9.2.1 above.

15.9.2.3 Utility Structures

All new piping and conduit will be non-metallic, unless metallic facilities are required for specific engineering purposes. There are no special provisions required if non-metallic materials are used.

To reduce the stray current effects on underground utilities, nonmetallic materials, sleeves, jackets or high quality coatings may be used. Utility structures owned by KCMO for the streetcar system, such as buried metallic pipes and conduits will be provided with electrical continuity. Pressure piping that penetrates structural walls will be electrically insulated from the outside service piping and from watering wall sleeves. Dielectric insulation will be made on the interior of the structural wall.

Replaced, relocated, and maintained-in-place utility structures, owned by others, will be provided with corrosion measures as required by individual master agreements. Existing utilities which may be affected by probable stray current may remain in place as reviewed on a case by case basis by KCMO.

15.9.3 Drainage Facilities

The corrosion control design will consider stray current control when warranted at drainage facilities including but not limited to inlets, manholes, catch basins, pipes, junction boxes, and other associated equipment. Substations will be provided with equipment described in Section 11.10.1 below.

15.9.4 Test Facilities

Test facilities will be required on all electrically bonded structures owned by KCMO for the streetcar system to measure and monitor stray currents. The corrosion control design will provide test facilities for individual protected structures as defined in Chapter 4, Utilities.

15.9.5 Quality Control

Corrosion control designs will be coordinated with all other engineering disciplines to ensure that they do not conflict with other installations. Shop drawings, material catalog cuts, and additional information related to the corrosion control designs will be submitted for review and approval. Testing of materials prior to their delivery from a manufacturer, or during construction, will be conducted, as required, to ensure compliance to corrosion control designs.

15.10 Soil Corrosion Control of Buried Structures

15.10.1 General

This section provides criteria for the design of systems and measures to prevent corrosion from soils and ground waters on fixed facilities. Designs will be based on achieving a 50-year design life for buried structures through consideration of the following:

- Materials of Construction: All piping (pressure and non-pressure) and conduit will be non-metallic unless metallic materials are required for specific engineering purposes. Use of metallics will be supported by engineering calculations when used in lieu of non-metallics. Aluminum and its alloys will not be used for direct burial purposes.

Deleted: *DRAFT*

Deleted: *Downtown*

- Safety and Continuity of Operations: Corrosion control provisions will be required for all facilities, regardless of location or material when failure of such facilities caused by corrosion will affect safety or interrupt continuity of operations.

15.10.2 Scope

The structures which may be affected by soil and water corrosion will be identified. Typically these include, but are not limited to:

- Ferrous pressure piping (water, fire water, gas, sewage ejectors, etc.)
- Buried and on-grade reinforced concrete structures
- Support pilings
- Underground storage tanks
- Other underground structures

Corrosion control measures for structures owned by others will be coordinated with the interested owner. This coordination will be required to resolve design conflicts and to minimize impact of other designs, such as interference of cathodic protection. All contacts with owners of other structures will be coordinated through the final design team.

15.11 Soil Corrosion Prevention Systems

15.11.1 General

Protection of metal structures will include, but not be limited to, corrosion control techniques, such as coating, electrical isolation, electrical continuity, and cathodic protection. The corrosion control designer will also coordinate the designs to identify reinforced concrete structures subject to corrosion attack and specify cement types in accordance with ASTM C150. For severe environments, supplemental coatings will be specified.

15.11.2 Materials and Structures

15.11.2.1 Ferrous Pressure Piping:

All buried cast iron, ductile iron and steel pressure piping within the streetcar project limits will be cathodically protected for those utilities as prescribed by KCMO. Designs should include, but not limited to, the following:

- Application of a bonded protective coating to the external surfaces of the pipe (see Section 15.11.3);
- Electrical insulation from interconnecting piping, other structures, and segregation into discrete electrically insulated sections depending upon the total length of the piping (see Section 15.11.4);
- Electrical continuity through installation of insulated copper wires, across all mechanical joints other than intended insulators (see Section 15.11.5);
- Permanent test/access facilities, to allow for verification of continuity, effectiveness of insulators and coating, and evaluation of protection levels; will be installed at all insulated connections and at intervals not greater than 200 feet;

Deleted: *DRAFT*
Deleted: *Downtown*

- Impressed current anodes and rectifier units or sacrificial anodes; the number of anodes and size of rectifier will be determined on an individual structure basis.

15.11.2.2 Reinforced/Pre-stressed Concrete Pressure Pipe:

Design and fabrication of new reinforced concrete pipe and steel cylinder prestressed concrete pipe will include the following:

- Establish a low permeability concrete by controlling the water/cement ratio, ratios of 0.3 for core concrete and 0.25 for mortar are preferred, industry practices may result in significant increases and wide variations to these levels;
- Maximum of 200 ppm chloride concentration in mixing water for concrete;
- Use of Type I Portland Cement generally. Type II Portland Cement should be used in selected locations.

15.11.2.3 Concrete/Reinforced Concrete

Design will be based on the following for concrete in contact with soils:

- Use of Type I Portland Cement, or Type II Portland Cement in selected locations;
- Maximum water/cement ratio of 0.45 by weight;
- Maximum 200 ppm chloride concentration in mixing water and admixtures combined;
- Minimum 2-inch concrete cover on the soil side of all steel reinforcement when the concrete is poured within a form, or a minimum 3-inch cover when the concrete is poured directly against soils.

15.11.2.4 Support Pilings

Preferred design will be based on using a steel shell filled with reinforced concrete, with the concrete as the load bearing member for maximum corrosion protection.

Design based on the use of metallic supports exposed to the soil such as H-beams will consider the use of protective coatings and cathodic protection. The need for special measures will be based on the type of structures, analysis of soil borings for the corrosive characteristics of soils, and the degree of anticipated structural deterioration caused by corrosion.

15.11.2.5 Non-Metallic Materials

Plastics, fiberglass, and other non-metallic materials for pressurized piping may be appropriate to aid in corrosion control. The corrosion control design will consider the following characteristics of proposed materials:

- Manufacturer's recommendations
- Mechanical strength and internal pressure limitations
- Elasticity/expansion characteristics
- Comparative costs
- Expected life
- Failure modes
- Local codes

Deleted: *DRAFT*

Deleted: *Downtown*

- Prior experiences with the proposed non-metallic material in similar applications

15.11.2.6 Electrical Conduits

Buried metallic conduits will include the following minimum provisions:

- Galvanized steel with a PVC topcoat or other coating acceptable for direct burial, including coupling and fittings;
- Galvanized steel with a minimum of 3 inches concrete cover on soil sides within duct banks;
- Electrical continuity through use of standard threaded joints or bond wires installed across non-threaded joints.

15.11.3 Coatings

Buried metal structures requiring coating will be provided with coal tar, coal tar tape, or coal tar epoxy coating systems having high electrical resistance. Mill-applied coatings will be specified whenever possible with use of compatible tape coatings for joints and field touch-up. The corrosion control design will specify surface preparation, application procedure, primer, number of coats, and minimum dry film thickness for each coating system. Other coating will be considered on a case-by-case basis by KCMO.

15.11.4 Electrical Insulation

Devices used for electrical insulators for corrosion control will include non-metallic inserts, insulating flanges, coupling, unions, and concentric support spacers. Devices will meet the following minimum criteria:

- Devices will have a minimum of 10 mega-ohms prior to installation and will have mechanical and temperature rating equivalent to the structure in which it is installed;
- Devices will have sufficient electrical resistance after insertion into the operating piping system such that no more than two percent of a test current applied across the device flows through the insulator, including flow through conductive fluids if present;
- Devices installed in chamber or otherwise exposed to partial immersion or high humidity will have a protective coating applied over all components.

Design will specify the need for, and location of, insulating devices. All devices will be equipped with permanent test facilities when they are not accessible or when specialized equipment is necessary for access.

Wherever possible, a minimum clearance of 6 inches will be provided between new and existing structures. When field conditions prohibit a 6-inch clearance, the design will include special provisions to prevent electrical contact with the existing structure(s).

15.11.5 Electrical Continuity

Electrical continuity will be provided for all underground non-welded pipe joints and will meet the following minimum criteria:

- Use direct burial insulated, stranded copper wires with the minimum length necessary to span the device being bonded;

Deleted: *DRAFT*

Deleted: *Downtown*

- Wire size will be based on the electrical characteristics of the structure and resulting network to minimize attenuation and allow for cathodic protection;
- A minimum of two wires will be used per joint for redundancy.

15.11.6 Cathodic Protection

Cathodic protection systems will be provided for buried metallic structures consistent with the structure life objectives. Wherever feasible, cathodic protection will be accomplished by sacrificial galvanic anodes to minimize corrosion interaction with other underground utilities. Impressed current systems will be used only when use of sacrificial systems is not technically and economically feasible. City staff will approve use of these systems at the conceptual stage prior to detail design. Cathodic protection schemes, using forced drainage of transit induced stray DC currents that require connections to the negative system, will not be used.

Cathodic protection system design will be based on theoretical calculations for each system including the following minimum parameters:

- Cathodic current density (minimum 1.0 mA/ft² of bare area)
- Current requirements
- Anticipated current output/anode
- Assumed percentage bare surface area (minimum 1 %)
- Indicated total number of anodes, size, spacing
- Anticipated anode life
- Anticipated anode bed resistance

The sum of the anticipated anode life and time-to-failure based on corrosion rates (anticipated at 90 percent cumulative probability level) will not be less than 50 years.

15.11.6.1 Impressed Current Rectifier Systems

Impressed current rectifier systems will be completely designed using variable voltage and current output rectifiers. Rectifiers will be rated a minimum 50 percent above calculated operating levels to overcome a higher than anticipated ground bed resistance, lower than anticipated coating resistance, or presence of interference bonds. Other conditions which may result in increased voltage and current requirements will be considered.

15.11.7 Test Facilities/Testing

Test stations consisting of two structure cables, one reference electrode, conduits, and termination boxes will be designed to permit initial and periodic tests of cathodic protection levels, interference currents, and system components (anodes, insulated fittings, and continuity bonds). The corrosion control design will specify the locations and types of test facilities for each cathodic protection system.

15.11.8 Water Treatment

For heating and air conditioning systems, chemical treatment of chiller, condenser and boiler supply and return systems will be designed to minimize internal corrosion and to prevent component fouling. Water treatment systems will be designed to prevent corrosion rates in excess of 2.0 mils per year for steel and 0.1 mil per year for copper. Provisions for corrosion

Deleted: *DRAFT*

Deleted: *Downtown*

rate measurements will be made in the return lines. All chemical treatment systems will comply with environmental protection requirements. The corrosion control design will include appropriate measures and provide space requirements for treatment equipment.

15.12 Atmospheric Corrosion Prevention

15.12.1 General

The purpose of this section is to provide criteria for designs that will ensure the necessary function and appearance of structures exposed to the environment. Criteria for atmospheric corrosion control are based on prevention of appearance and reduction of maintenance costs. System wide criteria for all areas will include the following:

- Materials selection: Materials will have established performance records for the service intended;
- Sealants: Sealants will be used in crevices to prevent the accumulation of moisture;
- Protective coatings: Barrier or sacrificial coatings will be used on steel;
- Design: Use of dissimilar metals and recesses or crevices that might trap moisture will be avoided.

15.12.2 Scope

The structures which may be affected by atmospheric corrosion will be identified. Typically, these include, but are not limited to:

- OCS structures and hardware
- Vehicles
- Exposed metal surfaces on aerial and mainline structures
- Exposed metal at passenger stops
- Right-of-way and enclosure fences
- Shop and yard exposed metal surfaces
- Electrical, mechanical, signal and communication devices and equipment and traction power substation housings

15.13 Atmospheric Corrosion Prevention Systems

15.13.1 Materials

Metals exposed to the atmospheric environments will be selected and provided as follows:

- Steels and Ferrous Alloys
  - Carbon steel and cast iron exposed to the atmosphere will have a coating applied to all external surfaces. Rail and rail fasteners will not require coatings.
  - High strength low alloy (HSLA) steels will be protected similarly to carbon steels except where used as weathering steel exposed to the outside environment. Coating of metallic

Deleted: *DRAFT*

Deleted: *Downtown*

contacting surfaces, crevice sealing and surface drainage will be addressed in the designs. Staining of adjacent structures will be considered.

- Series 200 and 300 stainless steels are suitable for use in any exposed situation without future protection. Series 400 stainless steels are acceptable, but must be evaluated due to possible staining.
- Stainless steel surfaces will be cleaned and passivated after fabrication.

- Aluminum Alloys
  - Use an anodized finish to provide the best weather resistant surface.
- Copper Alloys
  - Copper and its alloys can be used where exposed to the weather without additional protection. Bimetallic couplings will be avoided.
- Magnesium Alloys
  - Magnesium alloys will have a barrier coating applied when long term appearance is critical. Bimetallic coupling will be avoided.
- Zinc Alloys
  - Zinc alloys can be used without additional protection. Bimetallic coupling will be avoided.

15.13.2 Coatings

Coatings will have a proven past performance records and be compatible with the metallic surface to be coated. Resistance to chalking, and color and gloss retention will be satisfactorily established for the life of the coating.

15.13.2.1 Organic Coatings

Organic coating systems will consist of a wash primer (if substrate requires), a primer, intermediate coat(s), and a finish coat. Acceptable organic coatings for use are as follows:

- Aliphatic polyurethanes
- Vinyl copolymers
- Epoxy - as a primer where exposed in the atmosphere or as the complete coating system where protected from direct sunlight
- Acrylic - where there is not exposure to direct sunlight
- Alkyd - where there is not exposure to direct sunlight

15.13.2.2 Metallic Coatings (for Carbon and Alloy Steel)

Acceptable coatings are as follows

- Zinc (hot dip galvanizing)
- Aluminum

Deleted: *DRAFT*

Deleted: *Downtown*

- Aluminum-zinc

15.14 Grounding

15.14.1 Purpose

The purpose is to insure that grounding and corrosion control requirements do not conflict so as the render either system ineffective. The key to accomplishing complementary systems is proper location of insulation points and proper means of grounding systems.

15.14.2 Scope

Facilities addressed include the following:

- Traction Power Substations (TPSS)
- Aerial OCS Structures

15.15 Design and Coordination of Grounding Systems

15.15.1 Aerial OCS Structures

15.15.1.1 General Requirements

Elements on aerial structures are to be grounded such as OCS poles, handrails, cable trough components, and any other metallic elements. Metallic elements may be electrically connected to the top layer of reinforcing steel in the deck if it is welded together to create an electrically continuous top grounding mat. At each end of the structure, insulated cables will be exothermically welded to the reinforcing grounding steel mat and terminated in an appropriately sized and conveniently located weatherproof junction box or manhole. Support piers and abutments will be insulated from the structural deck members. If epoxy coated rebar is used in the deck then a separate grounding system needs to be provided for metallic elements.

15.15.1.2 Coordination Requirements

In order to provide compatible aerial grounding systems and corrosion control systems, the following items will be coordinated:

- Ground electrode component materials
- Ground electrode locations
- Aerial component electrical continuity details
- Pier support/insulation details

15.15.2 Traction Power Substations

Corrosion control installations will be coordinated with grounding electrodes, grounding standards, grounding requirements, and IEEE Standard.

Deleted: *DRAFT*

Deleted: *Downtown*

THIS PAGE INTENTIONALLY LEFT BLANK

Deleted: *DRAFT*
Deleted: *Downtown*

16.0 SAFETY AND SECURITY

16.1 Introduction

The streetcar design shall address system safety elements according to the requirements of the applicable standards listed. Should any standard or requirement conflict, the most stringent standard shall apply. The purpose of this chapter is to establish the standards and design policies for the design, construction, and commissioning of the system's safety elements on the streetcar project. To ensure the safety of the system and to mitigate hazards on the project the designer and contractors shall comply with the current version of the streetcar Project's Safety and Security Management Plan (SSMP), Safety and Security Certification Plan (SSCP), and the System Safety Program Plan (SSPP).

The Safety and Security Review Committee (SSRC), established by KCMO, shall review and accept all designs and any subsequent changes or modifications. The Project Manager, Project Management Consultant, and/or Design Engineer shall present design reviews to the SSRC as design milestones are reached. Additionally, any deviation from the project's design criteria must be approved by the SSRC.

16.2 Safety Design Guidelines

16.2.1 General Safety Criteria

These criteria for systems, fixed facilities, structural designs, and subsequent operational procedures are intended to allow the system safety goals to be implemented and documented through all aspects of design development, construction, implementation, testing, operations, and maintenance. General system safety criteria include:

Deleted: shall ensure that
Deleted: are

1) The design shall minimize exposure of personnel operating, maintaining, or repairing equipment to hazards such as entrapment, chemical burns, electrical shock, cutting edges, sharp points, electromagnetic radiation, or toxic atmospheres.
2) Emergency equipment/devices for public use shall be clearly identified and accessible. Interlocks, cutouts, fittings, etc., shall be accessible through access panels, which shall be secured to prevent tampering and vandalism.
3) Where failures could result in personal injury, major system damage, or inadvertent operation of safety critical equipment, redundancy or fail-safe principles shall be incorporated into the design.
4) Physical and functional interfaces between subsystems shall be analyzed. Those hazards associated with interfaces shall be specifically identified as system integration hazards and tracked for effective resolution.
5) There shall be no single-point failures in the system that can result in an unacceptable or undesirable hazard condition.
6) If an unacceptable or undesirable hazard condition can be caused by combining multiple incident failures, then the first failure shall be detected, and the system shall achieve a known safe state before subsequent failures occur.
7) All safety-critical elements in a vital system shall be designed and implemented with fail-safe principles. Fail-safe principles shall be realized by designing the system to have intrinsically safe failure characteristics or by designing the system with verifiable

Deleted: Minimize

Deleted: safety
Deleted: fail

Deleted: *DRAFT*

Deleted: *Downtown*

techniques that detect potentially unsafe failures and ensure that the system reverts to a known safe state.

- The following criteria shall be used, as a minimum, for implementing fail-safe functions and vital circuits:
  - Component failures or loss of input signals shall not cause unsafe consequences and shall not, when added to other failures, cause unsafe consequences.
  - Any number of simultaneous component failures attributable to the same cause or related causes shall not result in an unsafe condition.
- The following criteria shall apply to electrical/electronic circuits:
  - Broken wires, damaged or dirty contacts, relays failing to respond when energized, or loss of power shall not result in an unsafe condition.
  - The relays used in vital circuits shall conform to all applicable parts of the AREMA Communications and Signals Manual of Recommended Practice, Section 6, Relays.
  - Circuitry components shall be considered able to fail in either the open or shorted condition. It shall be assumed that multi-terminal devices can fail with any combination of opens, shorts, or partial shorts between terminals. Protection shall be provided in the event that any amplifier is subject to spurious oscillations at any frequency.

8) Where redundancy is used in a safety-critical area, there shall be no single point of failure that would result in the loss of safety protection. Redundant paths shall not contain a common predominant failure mode.

Deleted: safety

9) Design shall include component interlocks wherever an out-of-sequence operation can cause a hazard.
10) Suitable warning and caution notes in operating, assembly, maintenance and repair instructions, and distinctive markings on hazardous components, equipment, or facilities for personal protection, shall be provided.
11) Color-coding used for equipment and facilities shall be uniform.
12) Each design shall be evaluated for hazards to identify basic deficiencies, inherent hazards of operation, safety-critical malfunctions, maintenance hazards, human factors deficiencies, environmental hazards procedural deficiencies, and for compliance with codes, standards, and regulations. Written documentation of this evaluation shall be provided at the time final design is accepted.

Deleted: safety

13) The safety system analysis shall include review of fixed facilities and structures for employee access and maintenance safety.
14) Maintenance activities required to preserve or achieve risk levels shall be prescribed to the Rail Operations Manager during the design phase. These maintenance activities shall be minimized in both frequency and in complexity of their implementation. The personnel qualifications required to adequately implement these activities shall also be identified.
15) Software faults shall not cause an unacceptable or undesirable hazard condition.
16) Unacceptable hazards shall be eliminated by design.
17) Hazardous substances, components and operations shall be isolated from other activities, areas, personnel and incompatible materials.
18) Risk resulting from excessive environmental conditions (e.g. temperature, pressure, noise, toxicity, acceleration, and vibration) shall be minimized.

16.2.2 Safety at Streetcar Stops

Deleted:

The safety of patrons at streetcar stops should receive top consideration from transit agencies. Crime and crashes at streetcar stops endanger transit agency personnel and customers, make them feel vulnerable, and generate negative perceptions of transit that discourage ridership. There is much that can be done through the design of streetcar passenger facilities to ensure passenger safety. KCMO can use design to limit passengers' exposure both to criminal activity and to traffic safety hazards. Crime prevention through environmental design (CPTED), concepts seek to reduce vulnerability to crime. Other techniques, outside of CPTED, can also be implemented to reduce passenger exposure to accident and injury.

CPTED relies on three basic strategies:

- Natural surveillance — placing physical features, lighting, activities, and people in ways that maximize observance of activity.
- Natural access control — using judicial placement of entrances, exits, fencing, landscaping, and lighting to direct foot and automobile traffic in ways that discourage crime.
- Territorial reinforcement — using physical and symbolic boundaries and features to define the space, encourage ownership, and reinforce desired activities.

The design guidelines use CPTED principles to reinforce safety and security. Designers shall make themselves familiar with CPTED principles and practices and incorporate them into design of streetcar facilities.

16.3 Security Design Guidelines

This section offers general security design guidelines to be followed by streetcar system designers:

16.3.1 Visibility

- Provide maximum visibility into and out of all transit facilities from as many sides as possible.
- Provide clear, direct access to stop areas.
- Locate facilities in active areas and design the surrounding area to maximize use and views. Illuminate streetcar stops and major facilities at night with as much indirect lighting as possible.
- Design major streetcar facilities as distinctive "landmarks."
- Construct transit shelters and waiting areas to have clear lines of sight over parking areas and drop-off areas.
- Use glass instead of plexiglass for most enclosures as plexiglass yellows and scratches and gives an impression of lack of maintenance.

16.3.2 Lighting

Lighting is a critical security measure. The most important factor in lighting is to sustain a constant, uniform level of light in each area. It is also advisable to provide ample lighting for vulnerable areas such as the sides of buildings and back doors. This lighting should avoid spotlighting points, which leaves surrounding areas dark.

Deleted: *DRAFT*

Deleted: *Downtown*

Deleted: get

Deleted: Nevertheless, there

Deleted: This chapter covers issues related to traffic safety, security, and crime prevention at transit facilities.

Deleted: , or

Deleted: *DRAFT*

Deleted: *Downtown*

- Illuminate streetcar stops with indirect lighting at the pedestrian level to make faces visible and avoid creating shadows.
- Analyze existing ambient lighting, and supplement as necessary, to light pedestrian access points to streetcar stops and stop facilities.
- Avoid lighting and landscape conflicts. Provide a minimum of one to two foot candles per square foot of light at the pedestrian level as recommended by the Illuminating Engineering Society of North America (IESNA).

16.3.3 Art

Art in public spaces, whether designed into architectural elements or in freestanding works, adds humanizing links that can lessen the public's feeling of discomfort in an unfamiliar setting and encourage "ownership" of the facility.

- Artistic elements, especially freestanding artworks, should be designed with durable, vandal-resistant materials to the greatest extent possible.
- Artwork should be located where it does not unduly obstruct views or cast shadows.
- Artwork might be placed out of reach in some cases, where it can be viewed with less risk of damage.
- Artwork should be of a design and material consistent with its long-term appearance and function.
- Artwork should be securely attached and should be free of sharp or heavy elements that could be used to inflict bodily harm.
- Artistic elements should not require high levels of routine maintenance; clean and undamaged surfaces contribute to a sense of personal safety.

16.3.4 Streetcar Stop Locations

Streetcar stop locations are selected primarily on the basis of estimated ridership, cost, environmental impacts, and other technical factors. Streetcar stop design for security purposes shall focus on site placement of stop facilities to maximize access at stop locations while counteracting potential security hazards.

Deleted: will

Deleted: the

- Locate streetcar stops where surrounding land uses, either existing or anticipated, will maximize the potential for activity around the stops, with the most intense use within a quarter-mile walking distance from the stop.
- Streetcar stops should be located to provide access from all directions.
- Streetcar stops should be located at destination points, i.e. activity center and land uses, with high potential ridership and bus transfer opportunities.
- Locate streetcar stops to encourage high visibility and promote clear lines of sight.

16.3.5 Streetcar Stop Canopies

- Create shelters that provide weather protection but allow easy surveillance.
- Avoid square columns or columns wider than 16 inches to minimize potential hiding places.
- Create shelters with glass roofs, which make shelters appear as "lanterns" at night and do not cast long shadows. Strive for a minimum eave height of nine feet to allow easy viewing into the shelter.
- Avoid deep U-shaped windscreens, which can create a feeling of entrapment.

Deleted: *DRAFT*

Deleted: *Downtown*

- Use graffiti-resistant materials and coatings or use easily-replaceable and cost-effective materials.

16.3.6 Streetcar Stop Furniture

- Minimize the amount of pad furniture to reduce pad obstructions while providing rider comfort.
- Provide a "furniture zone" to keep access routes clear and direct.
- Provide divisions in benches to discourage sleeping and loitering.
- Provide leaning rails along with bench areas so riders waiting for transit have more than one option.
- Choose materials that are not easily carved or subject to other vandalism.
- If bike lockers are desired, locate and design lockers to preserve clear lines of sight and to allow security checks inside the lockers.

16.3.7 Fare Collection

Deleted: s

- Locate fare collection/validation machines in furniture zones to keep access points clear.
- Keep fare collection/validation areas well lit.
- Provide fare collection/validation machines of the smallest dimension possible to minimize availability of hiding places.
- Locate fare collection/validation in areas where other transit information is provided.